ENERGY SECTOR

POWER TRANSDUCER **iMT510**
POWER TRANSDUCER & RECORDER **iMT511**

- ALL **SINGLE PHASE AC** NETWORK **MEASUREMENTS**.
- **VOLTAGE AND CURRENT AUTO RANGE** MEASUREMENTS UP TO 600V, 12.5A.
- **WIDE FREQUENCY** MEASUREMENT **RANGE** 16 HZ – 400 HZ.
- **POWER ACCURACY** CLASS **0.2** (IEC-688).
- **SERIAL OR ETHERNET** AND **USB** COMMUNICATION.
- **8 MB** FLASH **INTERNAL MEMORY**.
- UP TO **TWO I/O MODULES**.
- POWERFUL **ANALOGUE OUT**; 6 VOLTAGE AND CURRENT RANGES, NON-LINEAR CHARACTERISTICS, ETC..
- **USER FRIENDLY** PC SETTING **SOFTWARE.**

Iskra®

FEATURES

- Measurements of instantaneous values of all single phase values; U, I, P, Q, S, f, φ, energy, THD U, THD I, MD.
- Power accuracy class 0.2.
- Recording of up to 8 measurands and 16 alarms in the internal memory (8 MB flash).
- 16 adjustable alarms.
- Frequency range from 16 Hz to 400 Hz.
- RS232/RS485 communication up to 115,200 bit/s or USB communication and Ethernet simultaneously.
- MODBUS communication protocol.
- Up to 2 inputs or outputs (analogue outputs, digital inputs, alarm (digital) outputs, pulse outputs).
- Universal power supply (two voltage ranges).
- Automatic range of nominal current and voltage (max. 12.5 A and 600 V_{L-N}).
- Housing for DIN rail mounting.
- User-friendly PC MiQen software.

DESCRIPTION

iMT510/511 are intended for measuring and monitoring single-phase electrical power network. Input voltage and input current are electrically isolated from the system by means of high resistive input chain and current transformer respectively. It measures true RMS values by means of fast sampling of voltage and current signals, which makes instruments suitable for acquisition of transient events. A built-in microcontroller calculates measurands (voltage, current, frequency, energy, power, power factor, power angles, THD U, THD I, MD) from the measured signals.

COMPLIANCE WITH STANDARDS

Standard EN	***Description***
61010-1: 2010	Safety requirements for electrical equipment for measurement, control and laboratory use
60688:2013	Electrical measuring transducers for converting AC electrical variables into analogue and digital signals
61326-1:2013	EMC requirements for electrical equipment for measurement, control and laboratory use - Part 1: General requirements
60529:1997/A1:2000	Degrees of protection provided by enclosures (IP code)
60068-2-1/ -2/ -6/ -27/-30	Environmental testing (-1 Cold, -2 Dry heat, -30 Damp heat, -6 Vibration, -27 Shock)
UL 94	Tests for flammability of plastic materials for parts in devices and appliances

APPLICATION

The iMT510/511 power transducer and recorder is used for a permanent monitoring of most of the single-phase AC network values. Records are stored in the internal memory for the period of the last three iMT510/511 a perfect choice for numerous applications. iMT510/511 is delivered configured to default values. Subsequent customer configuration is possible with user friendly setting software MiQen. iMT510/511 supports a wide range of communication interfaces. Standard serial RS232/485 with speed up to 115200 baud is perfect for simple applications and serial bus interfacing. Ethernet 10/100 is ideal for a long distance monitoring and configuration of

numerous transducers. USB 2.0 can be used for a fast set-up or memory acquisition.

TECHNICAL DATA

Measurement input:

Nominal frequency range:	50 Hz, 60 Hz
Measuring frequency range:	16 Hz–400 Hz (max. 1000 Hz)

Current measurements:

Nominal value (I_N)	0.31 A...5 A
Max. measured value	12.5 A sinusoidal
Max. allowed value (thermal)	15 A cont.
(acc. to IEC/EN 60 688)	20 × I_N ; 5 × 1 s
Consumption	< I^2 × 0.01 Ω per phase

Voltage measurements:

Nominal value (UN)	57.7 V_{LN}...500 V_{LN}
Max. measured value (cont.)	600 V_{LN}
Max. allowed value	2 × U_N; 10 s
(acc. to IEC/EN 60 688)	
Consumption	< U^2 / 4.2 M Ω per phase
Input impedance	4.2 M Ω per phase

System:

Voltage inputs can be connected either directly to low-voltage network or via a high-voltage transformer to high-voltage network.

Current inputs can be connected either directly to low-voltage network or shall be connected to network via a corresponding current transformer (with standard 1 A or 5 A outputs).

BASIC ACCURACY UNDER REFERENCE CONDITIONS

Total accuracy (measurements and analogue output) according to IEC/EN 60 688.

Accuracy is presented as percentage of range except when it is stated as an absolute value.

Measurand	Accuracy (±% of range)	
Current Rms	0.2	0.1[2]
Voltage Rms	0.2	0.1[2]
Power (P, Q, S)	0.2	0.2[2]
Power factor (PF)	0.1	
Frequency (f)	10 mHz	
angle (φ)	0.1°	
THD(U), THD(I) (0...400 %)	0.5	
Active energy	Class 1	0.5S[1]
Reactive energy	Class 2	0.5[1]
Real time clock (RTC)	1 min/month	

[1] Optional

[2] On communication

COMMUNICATION

iMT510/511 has a wide variety of communication possibilities to suit specific demands. It is equipped with two standard communication ports (COM1A and COM1B). This allows different users to access data from a device simultaneously and by using Ethernet communication, data can be accessed worldwide.

Different configurations are possible (to be specified with order).

Configuration	COM1A	COM1B
1	RS232/485[1]	/
2	Ethernet	USB

[1] RS485 communication is available through DB9 or screw-in terminals, while RS232 is available only through DB9

Serial communication	*RS232*[1]	*RS485*[1]
Connection type	Direct	Network
Connection terminals	DB9[1]	screw terminals[1]
Function	Settings, measurements and records acquisition, firmware upgrade	
Insulation	Protection class I, 3.3 kV_{ACRMS} 1 min	
Max. connection length	3 m	1000 m
Transfer mode	Asynchronous	
Protocol	MODBUS RTU	
Transfer rate	2.4 kBaud to 115.2 kBaud	
Number of bus stations	/	≤ 32

[1] Both types of comm. are available but only one at a time

Ethernet:	
Connection type	Network
Connection terminals	RJ-45
Function	Settings, measurements and records acquisition, firmware upgrade
Insulation	Protection class I, 3.3 kV_{ACRMS} 1 min
Transfer mode	Asynchronous
Protocol	MODBUS TCP
Transfer rate	10/100 Mb/s autodetect

USB:	
Connection type	Direct
Connection terminals	USB-B
Function	Settings, measurements and records acquisition, firmware upgrade
Insulation	Protection class I, 3.3 kV_{ACRMS} 1 min
Transfer mode	Asynchronous
Protocol	MODBUS RTU
Transfer rate	USB 2.0

INPUT/OUTPUT MODULES

iMT510 is equipped with four multipurpose input/outpu/iMT511 slots. The following modules are available:

Alarm (digital) output	2 outputs	any I/O
Analogue output	2 outputs	any I/O
Pulse output	2 outputs	any I/O
Digital input	2 inputs	any I/O
Watchdog (status) output	2 outputs	any I/O

Analogue output:

Each of up to two analogue outputs is fully programmable and can be set to any of 6 hardware ranges, 4 current and 2 voltage, without opening an instrument. They all use the same output terminals.

Programmable DC current input:

Output range values –100 %…0…100 %

-1…0…1 mA	Range 1
-5…0…5 mA	Range 2
-10...0...10 mA	Range 3
-20...0...20 mA	Range 4
other ranges possible	by MiQen software
Burden voltage	10 V
External resistance	R_{Bmax} =10 V/I_{outN}

Programmable DC voltage input:

Output range values –100…0…100%

-1…0…1 V	Range 5
-10…0…10 V	Range 6
other ranges possible	by software
Burden current	5 mA
External resistance	R_{Bmin}= U_{outN}/5 mA

General:

Linearization	Linear, Quadratic
No. of break points	5
Output value limits	± 120% of nominal output
Response time (measurement and analogue output)	< 100 ms
Residual ripple	< 0.5 % p.p.

The outputs 1 and 2 may be either short or open-circuited. They are electrically insulated from each other (500 VACrms) and from all other circuits (3320 VACrms).

All output range values can be altered subsequently (zoom scale) using the setting software, but a supplementary error results (see INTRINSIC ERROR).

Alarm (digital) output:

Type	Relay switch
Rated voltage	48 V AC/DC (+40% max)
Max. switching current	200 mA
Contact resistance	≤ 100 mΩ (100 mA, 24 V)
Impulse	Max. 4000 imp/hour Min. length 100 ms
Insulation voltage	
Between coil and contact	4000 VDC
Between contacts	1000 VDC

Pulse output

Type	Solid state
Max. voltage	40 V AC/DC
Max. current	30 mA (R_{ONmax} = 8 Ω)
Pulse length	programmable 2 ms...1000 ms

Digital input

Rated voltage	48 V AC/DC (+ 40% max)
Max. current	< 1.5 mA
Min. signal width	20 ms
Min. pause width	40 ms
SET voltage	40 %...120 % of rated voltage
RESET voltage	0 %...10 % of rated voltage

Watchdog (status) output

Type	Relay switch
Normal operation	Relay in ON position
Failure detection delay	≈ 1.5 s
Rated voltage	48 V AC/DC (+40 % max)
Max. switching current	1000 mA
Contact resistance	≤ 100 mΩ (100 mA, 24 V)

UNIVERSAL POWER SUPPLY

Standard (high):

Nominal voltage AC	80 V... 276 V
Nominal frequency	40 Hz... 65 Hz
Nominal voltage DC	70 V... 300 V
Consumption	< 5 VA
Power-on transient current	< 20 A ; 1 ms

Optional (low):

Nominal voltage AC	48 V... 77 V
Nominal frequency	40 Hz... 65 Hz
Nominal voltage DC	19 V... 70 V
Consumption	< 5 VA
Power-on transient current	< 20 A ; 1 ms

SAFETY:

Protection:	protection class I
⚠ ⏚	(protective earth terminal due to touchable metal parts (USB-B, RJ-45, DB9), current limiting fuse 1 A on aux. supply
	Voltage inputs via high impedance
	Double insulation for I/O ports and COM1 port
Pollution degree	2
Installation category	CAT III ; 600 V⏚ meas. inputs
	CAT III ; 300 V⏚ aux. supply
	Acc. to EN 61010-1
Test voltages	UAUX↔I/O, COM1: 2210 VACrms
	UAUX↔U inputs: 3320 VACrms
	U, I inputs↔I/O, COM1: 3320 VACrms
	U inputs↔I inputs: 3320 VACrms
Enclosure material	PC/ABS
	Acc. to UL 94 V-0
Enclosure protection	IP 40 (IP 20 for terminals)

MECHANICAL

Dimensions	(100 × 127 ×75) mm
Mounting	Rail mounting (35 × 15) mm
	acc. to DIN EN 50 022
Enclosure material	PC/ABS, PC (sliding cover)
Flammability	Acc. to UL 94 V-0
Weight	375 g

AMBIENT CONDITIONS:

Ambient temperature	usage group II
	0…15…30…55 °C
	Acc. to IEC/EN 60 688
Operating temperature	-30 °C to +70 °C (2x rated class)
Storage temperature	-40 °C to +70 °C
Average annual humidity	≤ 93% r.h.

REFERENCE CONDITIONS:

Ambient temperature	15°C …30°C
Relative humidity	≤ 93% r.h.
Voltage input	57.7 V…500 V
Current input	0.31 A…5 A
Frequency	45 Hz…65 Hz
Active/Reactive power factor	cosφ = 1, sinφ = 1
Waveform	Sinus

INTRINSIC-ERROR (FOR ANALOGUE OUTPUTS):

For intrinsic-error for analogue outputs with bent or linear-zoom characteristic multiply accuracy class with correction factor (c). Correction factor c (the highest value applies):

Linear characteristic

$$c = \frac{1-\frac{y_0}{y_e}}{1-\frac{x_0}{x_e}} \; or \; c = 1$$

Bent characteristic

$$x_{b-1} \leq x \leq x_b$$

b – number of break point (1 to 5)

$$c = \frac{y_b - y_{b-1}}{x_b - x_{b-1}} \times \frac{x_e}{y_e} \; or \; c = 1$$

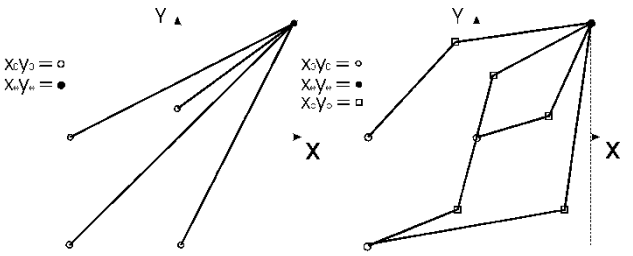

Limit of the output range

Examples of settings with linear and bent characteristic.

RECORDER

A built-in recorder (8Mb) enables storing measurements and detected alarms.

ALARMS

iMT510/511 supports recording and storing of 32 alarms in four groups. A time constant of maximal values in a thermal mode, a delay time and switch-off hysteresis are defined for each group of alarms.

MIQEN - SETTING AND ACQUISITION SOFTWARE

MiQen software is intended for supervision of iMT510/511 and many other instruments on a PC. Network and the transducer setting, display of measured and stored values and analysis of stored data in the transducer are possible via the serial, Ethernet or USB communication. The information and stored measurements can be exported in standard Windows formats. Multilingual software functions on Windows 98, 2000, NT, XP operating systems.

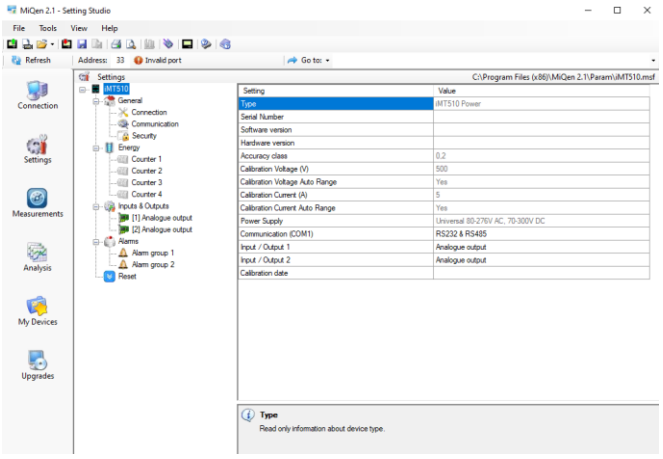

MiQen software is intended for:

- Setting all of the instruments parameters (online and offline).
- Viewing current measured readings.
- Complete I/O modules configuration.
- Upgrading instruments firmware.
- Searching the net for devices.
- Virtual interactive instrument.
- Comprehensive help support.

CONNECTION

System/ connection	*Terminal assignment*
Single-phase connection 1b (1W)	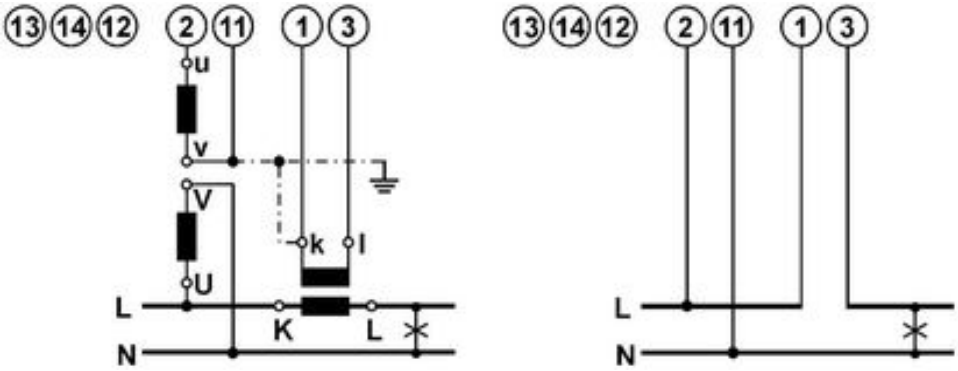

DIMENSIONAL DRAWING

Dimensions for iMT510/iMT511 (standard EU clamp style terminals):

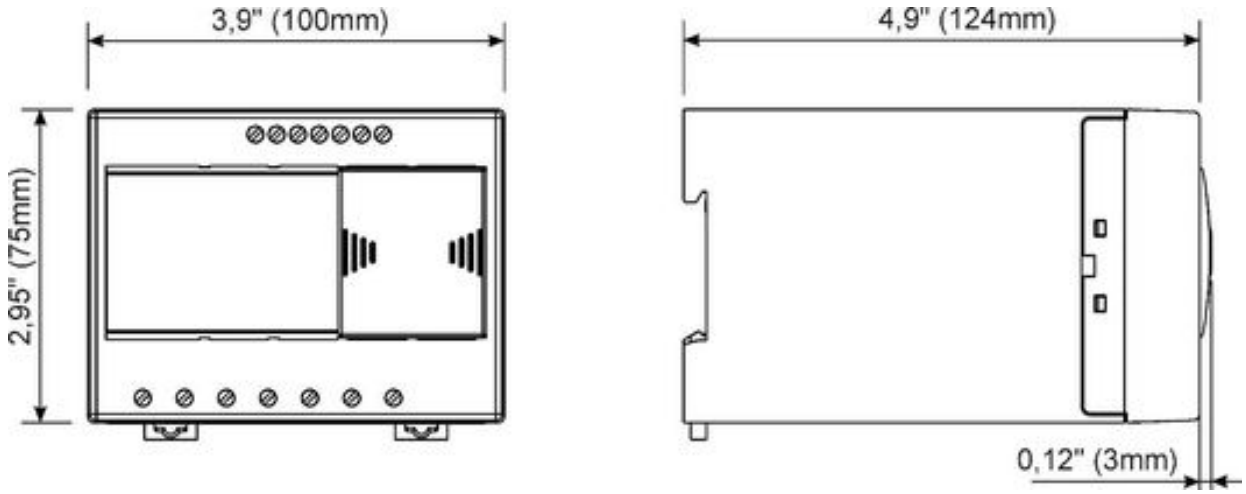

CONNECTION TABLE

Function			***Connection***
Measuring input:	AC current	IL1	1/3
	AC voltage	UL1	2
		N	11
		I/O	
Inputs / outputs:	Module 1	⊖→+	15
		⊖→—	16
	Module 2	⊖→+	17
		⊖→—	18
Auxiliary power supply:		+ / AC (L)	13
		– / AC (N)	14
		GROUND	12
Communication:	RS485	Rx / A	23*#
		NC	24*#
		Tx / B	25*#

* If ETHERNET/USB communication is supported, terminals 23, 24, and 25 are not used (unconnected)
# RS232 communication is available only on DB9 connection terminal under transparent cover

DATA FOR ORDERING

iMT510/511:

The following data shall be stated:

Type of a transducer
Type of power supply
Type of communication
Type of I/O module(s)
Required energy accuracy

Supplement:

MiQen software

ORDERING

When ordering iMT510/511, all required specifications should be stated in compliance with the ordering code. Additional information could be stated regarding functionality of analogue outputs. Default settings for analogue outputs provided that no ordering information is given will be:

Analogue output	*Input quantity*	*Output quantity*
AO1	P1 (-2500...0...2500)W	-20...0...20 mA
AO2	Q1 (-2500...0...2500)var	-20...0...20 mA

If different analogue output settings are required, a proper input quantity / output quantity pair for each analogue output should be provided.

The transducers automatic range of input current (5 A) and voltage (500 V_{L-N}) is not stated in the code.

Example of ordering:

iMT511 with EU style clamp terminals and with a universal-HI supply is connected to a universal high voltage and 5 A secondary current on 50 Hz network. Ethernet & USB communication, digital input as I/O1 and relay output as I/O2.

Voltage and current nominal value are due to auto-range fixed to max. nominal value and are therefore omitted from ordering code.

Example ordering code:

iMT511 S H E F M E

| | | | | | EU style clamp terminals

| | | | | Relay (alarm) output

| | | | Digital input 48 $V_{AC/DC}$

| | | Ethernet & USB

| | 70 V_{DC}.. 300 V_{DC}, 80 V_{AC}... 276 V_{AC}

50 Hz, 60 Hz

GENERAL ORDERING CODE

All specifications are obligatory except function of analogue output(s), which should be stated in a form of description.

Device Type	Nominal freq.	Aux. power supply	Comm. COM1	I/O module 1	I/O module 2	Clamp terminals	
iMT510	**X**	**X**	**X**	**X**	**X**	**X**	
	|	|	|	|	|	|	
	|	|	|	|	|	**E**	EU style clamp terminals *
	|	|	|	|	|	**R**	Ring style terminal block
	|	|	|	**A**			Analogue output*
	|	|	|	**S**			Pulse output
	|	|	|	**M**			Relay (alarm) output
	|	|	|	**W**			Watchdog output
	|	|	|	**F**			Digital input 48 $V_{AC/DC}$
	|	|	|	**N**			Without
	|	|	**R**	RS232 & 485	DB9 + Terminal *		
	|	|	**E**	Ethernet & USB			
	|	**H**	70...300 V_{DC}, 80...276 V_{AC} *				
	|	**L**	19...70 V_{DC}, 48...77 V_{AC}				
	S	50, 60 Hz *					
	A	400 Hz					
*	**-**	**standard**					

Device Type	Nominal freq.	Aux. power supply	Comm. COM1	I/O module 1	I/O module 2	Clamp terminals
iMT511	X	X	X	X	X	X

Clamp terminals	E	EU style clamp terminals *
	R	Ring style terminal block
I/O module 1 / I/O module 2	A	Analogue output*
	S	Pulse output
	M	Relay (alarm) output
	W	Watchdog output
	F	Digital input 48 V AC/DC
	N	Without
Comm. COM1	R	RS232 & 485 DB9 + Terminal *
	E	Ethernet & USB
Aux. power supply	H	70...300 V DC, 80...276 V AC *
	L	19...70 V DC, 48...77 V AC
Nominal freq.	S	50, 60 Hz *
	A	400 Hz
*	-	**standard**

DISPOSAL

It is forbidden to deposit electrical and electronic equipment as municipal waste.

The manufacturer or provider shall take waste equipment free of charge.

DICTIONARY:

RMS	*Root Mean Square*
PO	*Pulse output*
TI	*Tariff input*
PA	*Power angle (between current and voltage)*
PF	*Power factor*
THD	*Total harmonic distortion*
Ethernet	*IEEE 802.3 data layer protocol*
MODBUS/DNP3	*Industrial protocol for data transmission*
MiQen	*ISKRA setting and acquisition Software*
AC	*Alternating quantity*
IR	*Infrared (optical) communication*
RTC	*Real Time Clock*

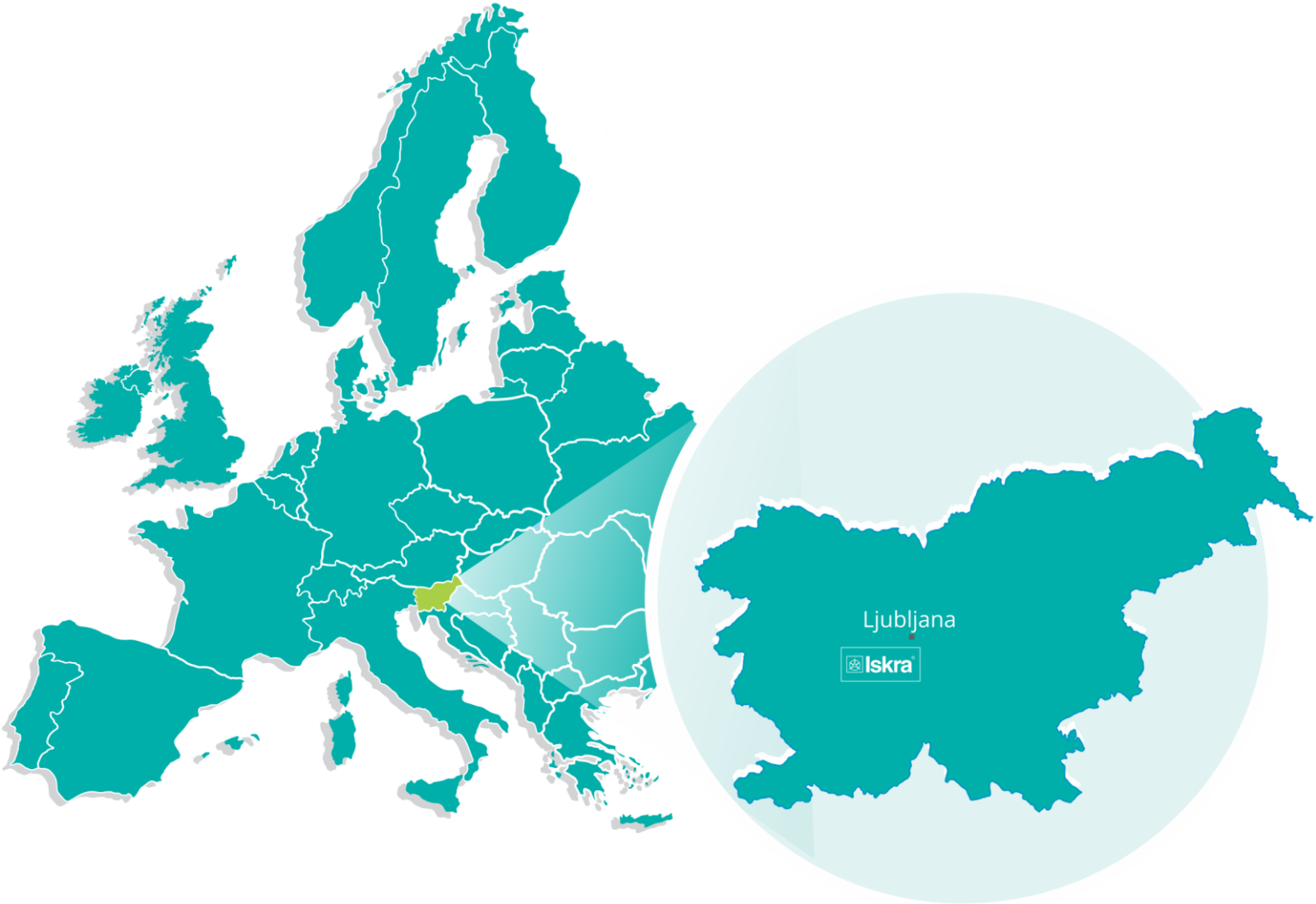

Iskra, d.o.o.
BU Ljubljana
Stegne 21
SI-1000 , Ljubljana
Phone: + 386 1 513 10 00

Iskra, d.o.o.
BU Capacitors
Vajdova ulica 71
SI-8333 , Semič
Phone: +386 7 38 49 200

Iskra, d.o.o.
BU MIS
Ljubljanska c. 24a
SI-4000 , Kranj
Phone: +386 4 237 21 12

Iskra, d.o.o.
BU Batteries & Potentiometers
Šentvid pri Stični 108
SI-1296 , Šentvid pri Stični
Phone: +386 1 780 08 00

Iskra, d.o.o.
BU Electroplating
Glinek 5
SI-1291 , Škofljica
Phone: +386 1 366 80 50

Iskra IP, d.o.o.
Vajdova ulica 71
SI-8333 , Semič
Phone: +386 7 384 94 54

Iskra STIK, d.o.o.
Ljubljanska cesta 24a
SI-4000 , Kranj
Phone: +386 4 237 22 33

Iskra Lotrič, d.o.o.
Ljubljanska c. 24a
SI-4000 , Kranj
Phone: +386 4 237 21 12

Iskra ODM, d.o.o.
Ljubljanska c. 24a
SI-4000 , Kranj
Phone: +386 4 237 21 12

Iskra Tela L, d.o.o.
Omladinska 66
78250 , Laktaši
Phone: +387 51 535 890

Iskra Sistemi - M dooel
Ul, Dame Gruev br. 16/5 kat
1000 , Skopje
Phone: +389 75 444 498

Iskra Commerce, d.o.o.
Hadži Nikole Živkoviča br. 2
11000 , Beograd
Phone: +381 11 328 10 41

Iskra Hong Kong Ltd.
33 Canton Road, T.S.T.
1705 , China HK City
Phone: +852 273 00 917

ISKRA ELECTRONICS GmbH
Südliche Münchner Str. 55
82031 Grünwald
Deutschland

Iskra®

Iskra, d.o.o.
Stegne 21
SI-1000 Ljubljana, Slovenia

Phone: +386 (0) 1 513 10 00
www.iskra.eu

EN

Published by Iskra, d.o.o. • Subject to change without notice • Version 1.00 July 2021 • EN P22.496.700