ZQ0107A, ZQ0207A, ZQ0307A, ZQ0407A
ZQ2107A, ZQ2207A, ZQ2307A

ZQ–Frequency meters, exchangeable scales

Iskra MIS, d.d.

FEATURES:

- Small consumption
- Microprocessor's frequency measuring method
- Power supply from measuring circuit
- Exchangeable dial
- Protective cover for terminals (optional)

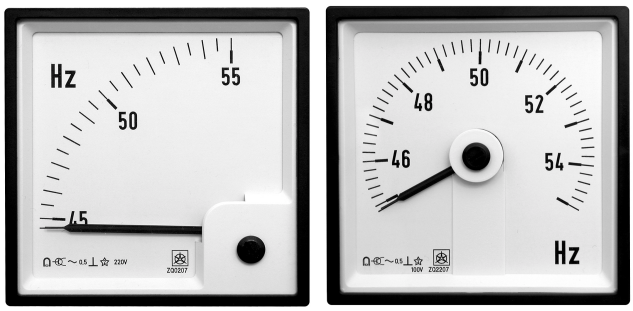

Picture 1: Frequency meter ZQ0207, ZQ2207

OPERATION DESCRIPTION

Pointer frequency meter is designed for measurement of mains voltage frequency within five different measuring ranges (45-55 Hz, 48-52 Hz, 45-65 Hz, etc). Dial has to be exchanged, when the measuring range is changed. Meter consists of: power supply unit, measuring unit with microprocessor and instrument with moving coil. The meter is powered through measuring terminals. One of the following voltage ranges can be used: from 57V to 110V, 230V, 400V, 500V. Voltage range is factory preset according to customer order.

TECHNICAL DATA

ACCURACY:

- All ranges 0.5

MEASURING RANGES:

- According to order: 45 .. 55 Hz
  48 .. 52 Hz
  45 .. 65 Hz
  55 .. 65 Hz
  58 .. 62 Hz

INPUT VOLTAGE:

Nominal voltage U_N [V]	57-110	230	400	500
Input resistance	16 kΩ	80 kΩ	139 kΩ	180 kΩ
Power consumption(max)	1 VA	1 VA	1,7 VA	2 VA

- Overload capacity 1,2 U_N continuously
  1,5 U_N up to 2 hours
  2 U_N up to 5 seconds

SAFETY:

- According to standard **SIST EN 601010-1:2002**
- Max. voltage versus ground CAT III, 300Vmax

(at 400V and 500V 300Vmax should be obeyed)

POWER SUPPLY:

- From measuring circuit $U_N \pm 20\%$

HOUSING:

- Material of housing: PC
  non-flammable, according to **UL 94 V-0**
- Enclosure protection: Case IP 52, terminal contacts IP 00
  (IP 20 for connection terminals)

according to **SIST EN 60529: 1997**

AMBIENT CONDITIONS

- Temperature:
  Reference range of operation +18 … +28°C
  Range of operation -25 … +55°C
  Storing -40 … +70°C
- Humidity up to 80% (without condensing)

DIALS

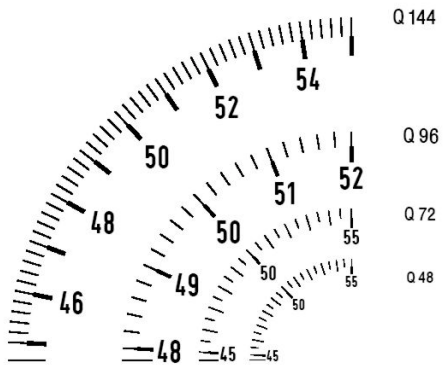

Figure 1:Dial drawing ZQ0x07A

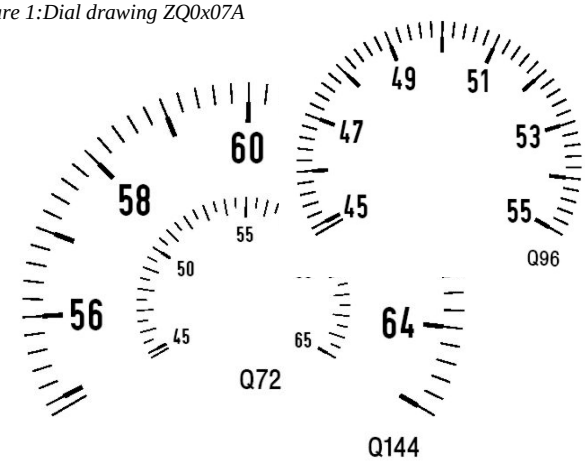

Figure 2:Dial drawing ZQ2x07A

ORDERING INFORMATION

For ordering it is necessary to declare type of the meter, measuring range and nominal voltage.
Basic data:
ZQxx07A - b, c
xx for dimensions and dials' type look table 1
b measuring range (look page 1)
c nominal voltage (look page 1)

Ship version of the instrument must be specified with adding L letter to the type designation (ZQ0207AL for example). Ship version is available only for meters ZQ0107A, ZQ0207A and ZQ0307A.

ORDERING EXAMPLE:

Frequency meter dimensions 96x96, dial type 90°, range 45 to 55 Hz, voltage 230 V, ship version:

ZQ0207AL 45-55 Hz, 230V

SPECIAL VERSION:

- Measuring range according to customer's wish
- Special marks on dial
- Empty dial
- Ship version (only ZQ0107A, ZQ0207A and ZQ0307A)
- Protective cover for protection of connecting terminals

DIMENSIONAL DRAWINGS:

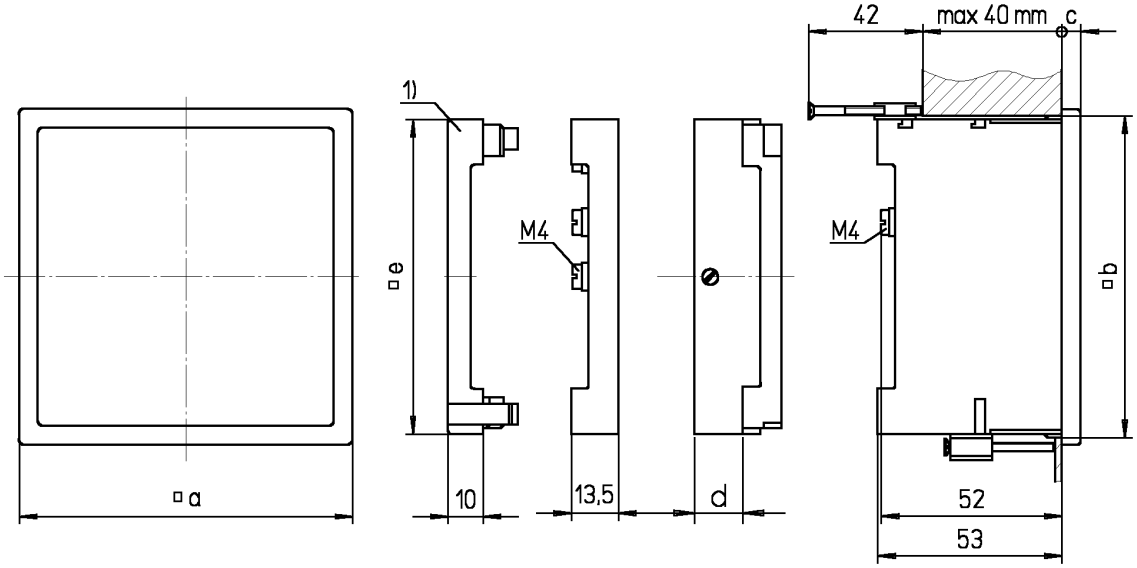

Picture 6: Dimensional drawings ZQ0107A, ZQ0207A, ZQ0307A, ZQ0407A, ZQ2107A, ZQ2207A, ZQ2307A (all dimensions are in mm) – protection cover (option)

Type		ZQ0107	ZQ0207	ZQ0307	ZQ0407	ZQ2107	ZQ2207	ZQ2307
Front frame (mm)	□ a	144	96	72	48	144	96	72
Panel cut-out (mm)	□ b	$138^{+1,0}$	$92^{+0,8}$	$68^{+0,8}$	$45^{+0,6}$	$92^{+0,8}$	$138^{+1,0}$	$92^{+0,8}$
Bezel height (mm)	c	8,0	5,5	5,5	5,0	8,0	5,5	5,5
Base (mm)	□ d	27,3	27,3	27,3	27,3	27,3	27,3	27,3
Protective cover (mm)	□ e	90	90	90	90	240	240	240
Scales length (mm)		135	95	65	41	220	135	101
Dimensions		150x155x80	102x102x75	80x75x75	55x55x75	150x150x137	160x105x102	100x90x120
Weight approximately (kg)		0.40	0.20	0.20	0.16	0.40	0.20	0.20

Table 1: Dimensions and weight

Iskra
Iskra MIS, d.d.
Ljubljanska c. 24a
SI-4000 Kranj
Slovenia
tel.: +386 4 237 21 40
fax: +386 4 237 21 29
e-mail: info@iskra-mis.si
www.iskra-mis.si

Printed in Slovenia • Subject to change without notice • Version 01 / jan. 2005 • T22.480.240