ZQ0117, ZQ0217, ZQ0317, ZQ1117, ZQ1217

Reed frequency meters

Iskra MIS, d.d.

ZQ – REED FREQUENCY METERS

FEATURES:

- For measurement frequencies of AC supply
- Range from 45 Hz to 65 Hz
- Good read-out survey on larger distance
- Minimum effect of temperature
- Low power consumption

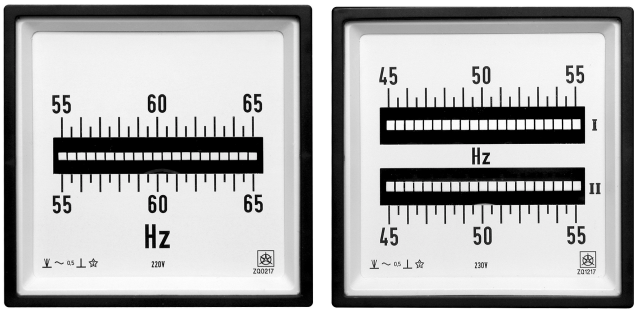

Picture 1: Single and two-systems reed frequency meters ZQ0217 and ZQ1217

APPLICATION

The vibrating-reed frequency meter is one of the simplest devices for indicating the frequency of an AC source. They are usually in-circuit meters, used on power panels to monitor the frequency of AC.
Two-systems reed frequency meters with two rows of reeds and two separate AC voltages can be used to synchronise two generators in parallel.

CONSTRUCTION

The element of these instruments consists of steel reeds, which are in the field of an electromagnet. These reeds vibrate in resonance with the energizing AC of the above electromagnet and are manufactured having 13 or 21 reeds. Only the reed whose natural frequency corresponds with the frequency of the AC supply will vibrate at full amplitude indicating the correct frequency on the dial. Different natural frequency of reeds can be provided by different lenghts or like in our instruments where the reeds are the same lengths, but are weighted by different amounts at the top so that they will have different natural rates of vibration. When two reeds show deflection of the same amplitude, the mean between the two gives the correct frequency.

Ship's version

Special "ship version" are delivered for building into ships. These are mechanically resistive instruments which correspond to the rules of construction of sea-going ships. The instrument case is marked by an anchor: ⚓ and a capital letter L at the end of the type designation.

TECHNICAL DATA

ACCURACY:

- accuracy class 0,5

DESIGN:

- Material of housing: PC
  uninflammable, according to **UL 94 V-0**
- Enclosure protection: Case IP 52, terminal contacts IP 00
  (IP 20 for connection terminals)
  according to **EN 60529**: 1989
- Operating position Vertical
- Test voltage 2 kV rms
  according to **EN 61010-1**: 1990
- Consumption: 110V – 230V 0.7 ... 1.2 VA
  Other ranges 1.4 ... 2 VA

AMBIENT CONDITIONS JVF (DIN 40 040)

- Climatic conditions:
  Standards **EN 60051-1**: 1995/01
  EN 60051-2: 1984
  EN 60051-9: 1988
- Temperature:
  Reference range of operation +18 … +28°C
  Nominal range of operation -25 … +55°C
  Storing -40 … +70°C
- Humidity up to 80% (without condensing)

TYPES OF FREQUENCY METERS:

TYPE			ZQ0317	ZQ0217	ZQ0117
MEASURING RANGE	Voltage (V)	No. of reeds			
47 ... 53 Hz	110, 230	13	•	•	•
	380, 500		•	•	•
57 ... 63 Hz	110, 230	13	•	•	•
	380, 500		•	•	•
45 ... 55 Hz	110, 230	21	-	•	•
	380, 500		-	•	•
55 ... 65 Hz	110, 230	21	-	•	•
	380, 500		-	•	•

Table 1: Single-system reed frequency meters

TYPE			ZQ1217	ZQ1117
MEASURING RANGE	Voltage (V)	No. of reeds		
2 x 47 ... 53 Hz	110, 230	2 x 13	•	•
	380, 500		•	•
2 x 57 ... 63 Hz	110, 230	2 x 13	•	•
	380, 500		•	•
2 x 45 ... 55 Hz	110, 230	2 x 21	•	•
	380, 500		•	•
2 x 55 ... 65 Hz	110, 230	2 x 21	•	•
	380, 500		•	•

Table 2: Two-system reed frequency meters

DIMENSIONAL DRAWINGS:

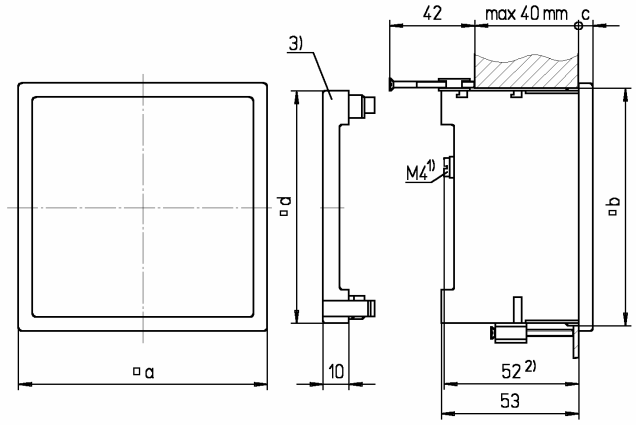

Picture 2: Dimensional drawing ZQ0117, ZQ0217, ZQ0317, ZQ1117 and ZQ1217 (all dimensions are in mm)

Type		ZQx117	ZQx217	ZQ0317
Bezel height (mm)	□ a	144	96	72
Panel cut-out (mm)	□ b	$138^{+1,0}$	$92^{+0,8}$	$68^{+0,8}$
Bezel height (mm)	c	8,0	5,5	5,5
Protect cover (mm)	□ d	90	90	66,5

Table 3: Dimensions

ORDERING DATA:

- Instrument type,
- Measuring range and voltage,
- Noumber of reeds.

ORDERING EXAMPLE:

- ZQ0217, 55 ... 65 Hz, 110 V, 21
- ZQ1217, 2 x 47 ... 53 Hz, 230V, 2 x 13

Iskra
Iskra MIS, d.d.

Ljubljanska c. 24a
SI-4000 Kranj
Slovenia
tel.: +386 4 237 21 40
fax: +386 4 237 21 29
e-mail: info@iskra-mis.si
www.iskra-mis.si

Printed in Slovenia • Subject to change without notice • Version 01 / dec. 2004 • E P22.080.480