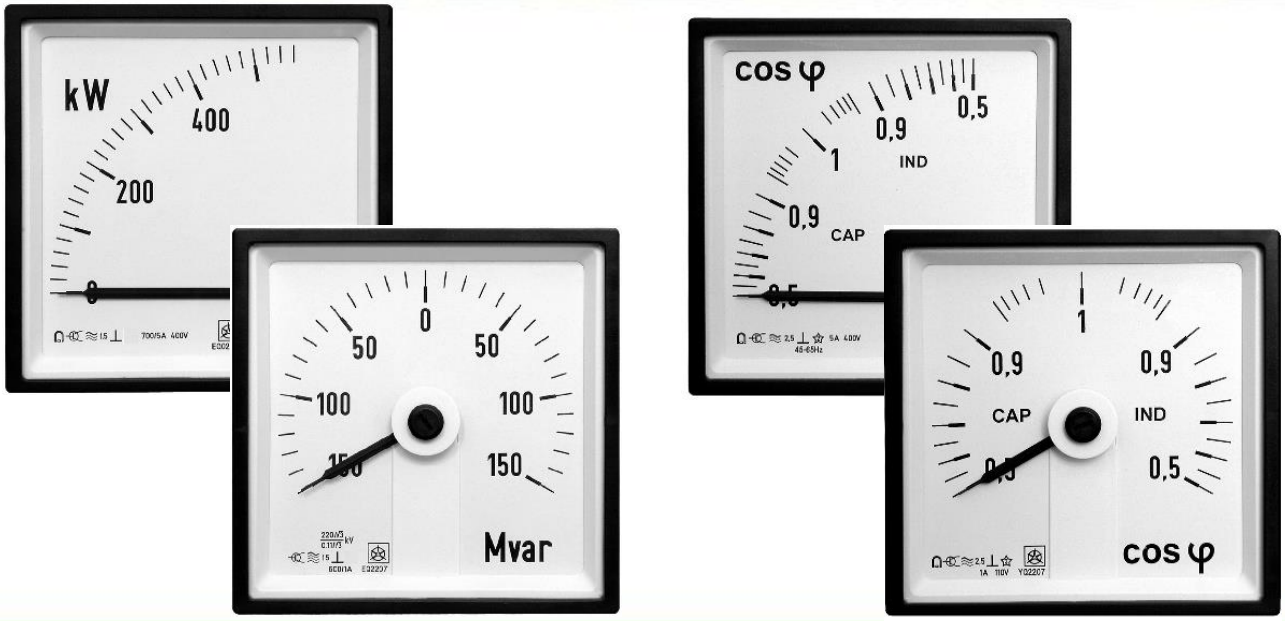

ANALOGUE POWER METERS

ACTIVE, REACTIVE, APPARENT POWER METERS AND POWER FACTOR METERS WITH EXCHANGABLE SCALES

EQ 0207 / 2207 / 0107 / 2107 & YQ 0207 / 2207 / 0107 / 2107

- MEASUREMENTS OF ACTIVE OR REACTIVE ENERGY OR APPARENT POWER (EQ) OR POWER FACTOR (YQ).
- SINGLE OR THREE PHASE, 3 OR 4 WIRE, BALANCED OR UNBALANCED CONNECTION.
- STANDARD 96 X 96 DIN CASE (EQ X207, YQ X207) OR STANDARD 144 X 144 DIN CASE (EQ X107, YQ X107).
- PROTECTIVE COVER FOR TERMINAL.
- USB SERVICE PORT.

Iskra®

FEATURES

- Measurements of active or reactive or apparent power (EQ) or power factor (YQ).
- Single or three phase, 3 or 4 wire, balanced or unbalanced connection.
- Standard 96 X 96 DIN case (EQ x207, YQ x207) or standard 144 x 144 DIN case (EQ x107, YQ x207).
- Exchangeable scale.
- Frequency range from 16 Hz to 400 Hz.
- Automatic range of nominal current (max. 12.5 A).
- Protective cover for terminal.
- USB service port.

DESCRIPTION

The meter is intended for measuring power and power factor in single-phase or three-phase electrical power network. The meter measure according to the principle of fast sampling of voltage and current signals. A built-in microprocessor calculates power and power factor from the measured signals.

USE

The meter is intended for measuring power of single-phase or three-phase electric distribution system.

SHIP VERSION

Special "ship version" are delivered for building into ships. These are mechanically resistive instruments which correspond to the rules of construction of seagoing ships (Bureau Veritas certified).

COMPLIANCE WITH STANDARDS

Standard EN	*Description*
61010-1	*Safety requirements for electrical equipment for measurement, control and laboratory use.*
60529	*Degrees of protection provided by enclosures (IP code).*
62051-1	*Direct acting indicating analogue electrical measuring instruments and their accesories.*
61326	*Electrical equipment for measurement, control and laboratory use – EMC requirements.*

**** – Partial compliance***

DESCRIPTION OF PROPERTIES

Measurands

Measurements of momentary active, reactive, apparent power and power factor.

Analogue pointer

Two types of pointers are available EQ 0x07 and YQ 0x07 have 90° analogue pointer. EQ 2x07 and YQ 0x07 have 240° analogue pointer.

End scale value

The end scale value is determined as follows:
The power to be measured by the instrument can be calculated by using one of the formula below:

Power system	Active	Reactive	Apparent
Single-phase	U I cosϕ	U I sinϕ	U I
3-phase 3-wire	√3U I cosϕ	√3U I sinϕ	√3U I
3-phase 4-wire	3 U I cosφ	3 U I sinφ	3 U I

Power factor is calculated from active and apparent power U in equations is the phase voltage in single-phase system, line voltage in three-phase 3-wire system, and phase voltage in three-phase 4-wire systems.

According to the calculated value, one of the following standard end scale values and their decade are chosen:

1 – 1.2 – 1.5 – 2 – 2.5 – 3 – 4 – 5 – 6 – 7.5 - 8

Supply

Power supply connection of the meter is adaptive. Meter can be supplied internally from voltage measuring inputs or externally via separate connector.

USB service communication (option)

Meter can be equipped with service port with mini USB connector that can be used for setting. This port is not galvanic separated and for this reason, BEFORE USE INPUT VOLTAGE AND POWER SUPPLY ON THE METER MUST BE DISCONNECTED.

Communication via service port is time limited.

TECHNICAL DATA

Inputs

Input signals	Current	Voltage
Nominal frequency range	± 0.2%	EN 61557-12
Measuring frequency range	± 0.2%	EN 61557-12
Nominal value (I_N, U_N)	± 0.5%	EN 61557-12
Maximal value	± 0.5%	EN 61557-12
Consumption	Cl. 0.5S	EN 62053-22

Supply

Power supply	**AC**
Nominal voltage AC	57.7 /63.5 / 100 / 110 / 230 / 400 V
Nominal frequency	40 Hz–65 Hz
Nominal voltage DC	–
Consumption	< 1.5 VA

Safety:

Protection:	protection class **II** **600 V rms**, installation category **II** **300 V rms** installation category **III** Pollution degree 2 In compliance with EN 61010-1
Enclosure material	PC/ABS Incombustibility – self-extinguishability, complying with **UL 94 V-0**
Enclosure protection:	IP 52 (IP 00 for terminals) In compliance with **EN 60529**
Cutting for installation:	$92^{+0,8}$ mm $138^{+0,1}$ mm
Converter mass:	max. 600 g

Mechanical

Dimensions	144 × 144 × 100 mm (CT 101.5 mm)
Mounting	Panel mounting 144 × 144 mm
Required mounting hole	137 × 137 mm
Enclosure material	PC / ABS
Flammability	Acc. to UL 94 V-0
Weight	550 g
Enclosure material	PC / ABS
	Acc. to UL 94 V-0

Ambient conditions:

Temperature range of operation:	-10 °C …60 °C
Storage temperature	-40 °C to +70 °C
Average annual humidity	≤ 75 % r.h. (no condensation)

Reference conditions:

Ambient temperature:	-10 °C … 23 … 55 °C
Voltage input:	+ / - 20% Un
Current input:	0 … 100 % In
Active / reactive power factor:	cosϕ=1 / sinϕ=1
Waveform:	Sinus

Accuracy

Measurand	Accuracy
Active or reactive or apparent power	1.5

CONNECTION

Voltage inputs can be connected either directly to low-voltage network or via a high-voltage transformer to high-voltage network.

Current inputs shall be connected to network via a corresponding current transformer.

System / connection	***Through-hole connection assignment***	***Terminal connection assignment***
1b (1W1b) *Single-phase connection*	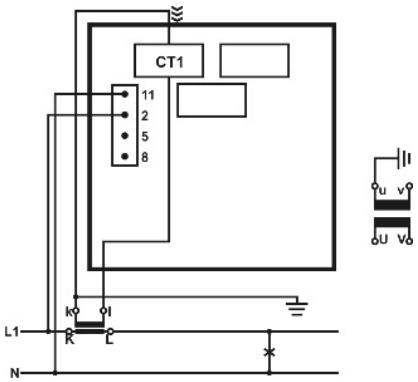	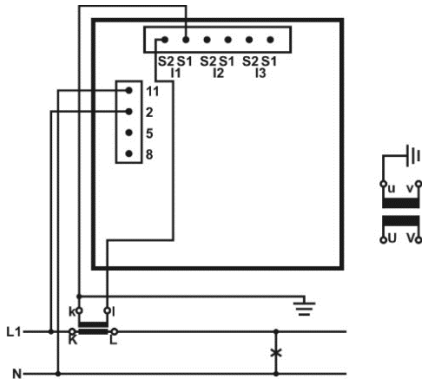
3b *Three-wire, balanced load*	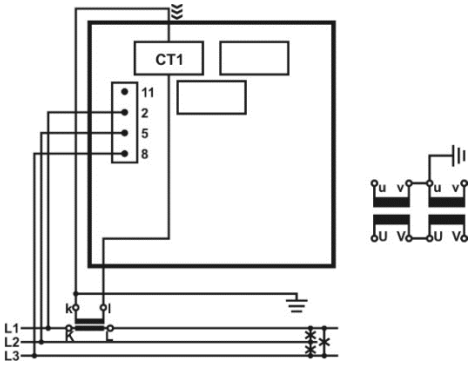	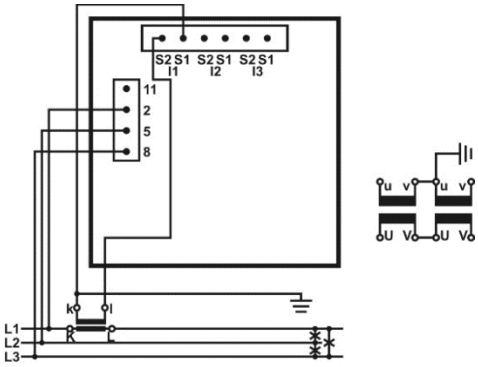
3u *Three-wire, unbalanced load.*	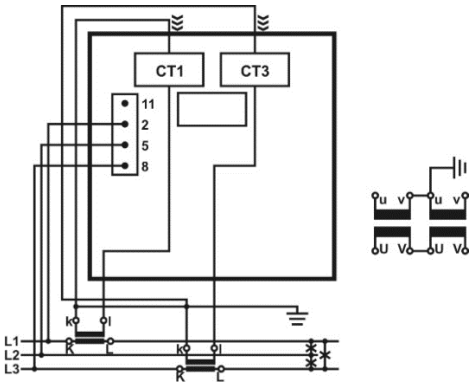	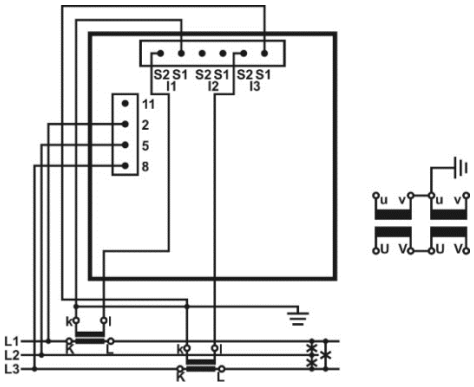

System / connection	Through-hole connection assignment	Terminal connection assignment
4b *Four wire, balanced load*	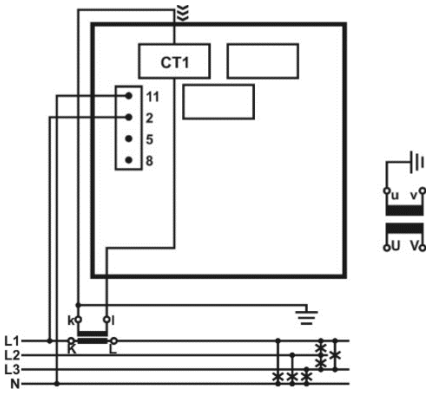	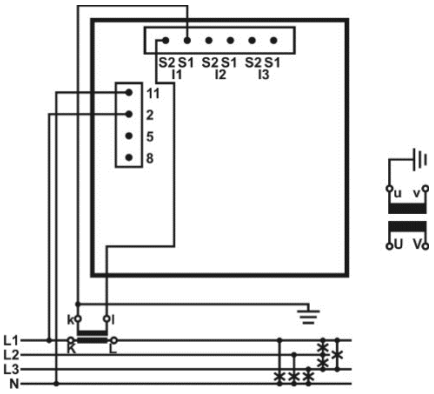
4u *Four wire, unbalanced load.*	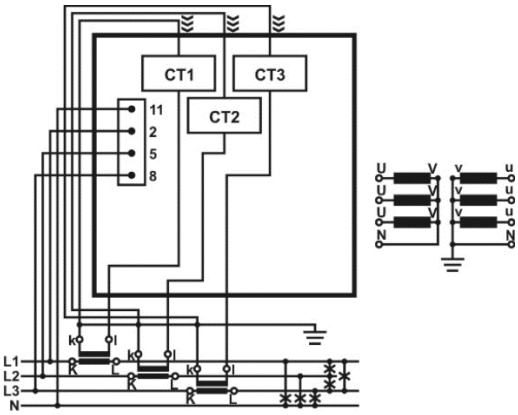	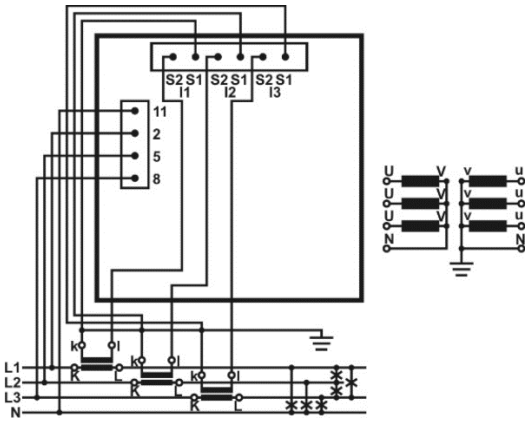

DIMENSIONAL DRAWING

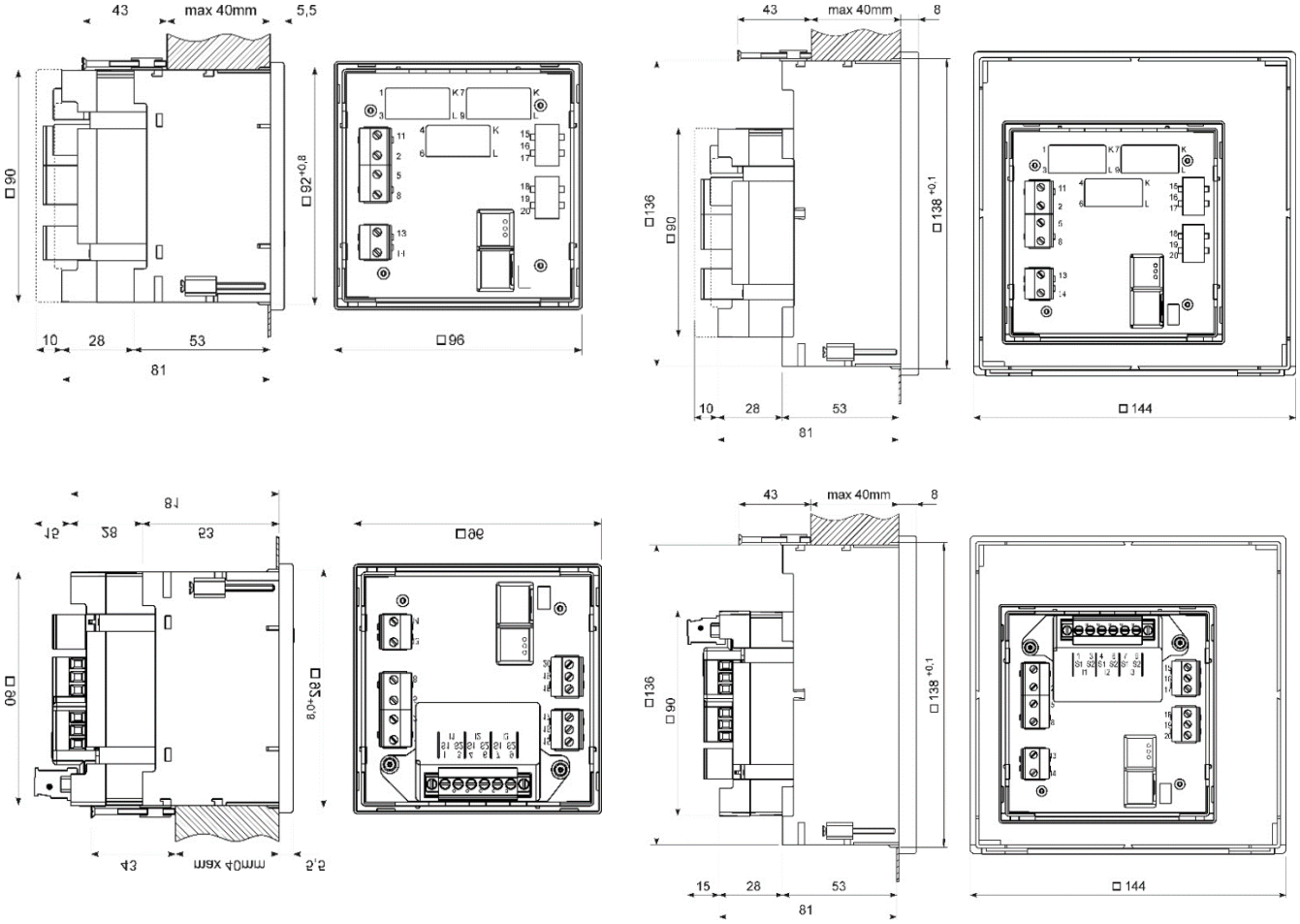

CONNECTION TABLE

Function		Terminals	
Measuring input:	AC current	IL1	CT1
		IL2	CT2
		IL3	CT3
	AC voltage	UL1	2
		UL2	5
		UL3	8
		N	11
Auxiliary power supply:		AC (L)	13
		AC (N)	14

Communication terminals

Communication		Terminals
USB service port	USB Min-B type	-

Terminals

Connection	Max. conductor cross-sections
Voltage inputs (4)	≤ 2.5 mm²; one conductor
Current inputs (3)	≤ Ø mm; one conductor with insulation
Power supply (2)	≤ 2.5 mm²; one conductor

DATA FOR ORDERING

The following data shall be stated:

- Type of a meter
- Connection
- VT and CT ratio
- Voltage range
- Type of power supply
- Scale data
- Special option

EQ xx07 general ordering code

When ordering the meter, all required specifications shall be stated in compliance with the ordering code:

Device Type	Class	Zero position	Connection	Nominal voltage	Nominal current	Frequency range	Auxiliary supply	Current Connection	Service Comm.	Finish	Window	Dial	Index Type	Zero Adjuster Colour	Protection Cover
EQ x207	**X**	**X**	**X**	**X**	**X**	**X**	**X**	**X**	**X**	**X**	**X**	**X**	**X**	**X**	**X**
															Y Yes*
															N No
														S Black*	
														W White	
													S Single Scale*		
													D Double Scale		
												S Standard with Scale*			
												N Bianco Dial			
												X No Dial			
											A Clear Glass*				
											B Clear Glass + Red Adj. Index				
											L Anti-Glare Glass				
											D Anti-Glare + Red Adj. Index				
										A Standard*					
										H HVE (Tropical Seal)					
										M Inc. Mech. Resistance					
										S Ship Ver.					
										P IP54					
										G HVE + IP54					
										R Ship Ver. + IP54					
										T Ship Ver. + HVE					
										V Ship Ver. + HVE + IP54					
									N Without*						
									M Mini USB						
								T Through Hole Transformer*							
								C Screw Terminal Connector							
							X Internal L1-N								
							Y Internal L1-L2								
							A E 57,7 V								
							B E 63,5 V								
							C E 100 V								
							D E 110 V								
							E E 230 V								
							F E 400 V								
							J E 440 V								
						S 50 Hz*									
						T 60 Hz									
						R 45...65 Hz									
					1A 1A										
					5A 5A										

Not available if Finish is P, G, R or V

|	|	|	**57P**	57,7 V L-N	\	**100L**	100 V L-L	\	**57V7**	57,7/100 V	\
|	|	|	**63P**	63,5 V L-N	I	**110L**	110 V L-L	I	**63V5**	63,5/110 V	I
|	|	|	**66P**	66,4 V L-N	I	**115L**	115 V L-L	I	**66V4**	66,4/115 V	I
|	|	|	**69P**	69,3 V L-N	I	**120L**	120 V L-L	I	**69V4**	69,3/120 V	I
|	|	|	**100**	100 V L-N	I	**220L**	220 V L-L	I	**110V**	110/190 V	I
|	|	|	**115**	115 V L-N	I	**225L**	225 V L-L	I	**120V**	120/208 V	I
|	|	|	**127**	127 V L-N	1B	**230L**	230 V L-L	I	**127V**	127/220 V	I
|	|	|	**130**	130 V L-N	Connect.	**380L**	380 V L-L	3B and 3U	**130V**	130/225 V	4B and 4u
|	|	|	**132**	132 V L-N	I	**400L**	400 V L-L	Connect	**132V**	132/230 V	Connect
|	|	|	**220**	220 V L-N	I	**415L**	415 V L-L	I	**220V**	220/380 V	I
|	|	|	**230**	230 V L-N	I	**440L**	440 V L-L	I	**230V**	230/400 V	I
|	|	|	**240**	240 V L-N	I	**450L**	450 V L-L	I	**240V**	240/415 V	I
|	|	|	**250**	250 V L-N	I	**460L**	460 V L-L	I	**254V**	254/440 V	I
|	|	|	**254**	254 V L-N	/	**470L**	470 V L-L	I	**277V**	277/480 V	I
|	|	|				**480L**	480 V L-L	I	**288V**	288/500 V	/
|	|	|				**500L**	500 V L-L	/			

|	|	**1B** Single phase
|	|	**3B** 3 phase 3 wire balanced
|	|	**3U** 3 phase 3 wire unbalanced
|	|	**4B** 3 phase 4 wire balanced
|	|	**4U** 3 phase 4 wire unbalanced
|	**L**	0 / 1*
|	**C**	-1 / 0 / 1
|	**F**	-0.1 / 0 / 1
|	**A**	-0.x / 0 / 1
S	1.5*	
H	1.0	

EQ 0107	Power meter 144 mm 90°
EQ 0207	Power meter 96 mm 90°
EQ 2107	Power meter 144 mm 240°
EQ 2207	Power meter 96 mm 240°

*_Default ordering value

EQ xx07 general ordering code- configuration settings:

VT ratio	CT ratio	Measured parameter - Index	Scale Range - Index
Xxx V / xxx V	**Xxx A / x A**	**X**	**0...xxx W**
|	**|**	**|**	**0...xxx W (kW, MW, GW)**
|	**|**	**|**	**0...xxx var (kvar, Mvar, Gvar)**
|	**|**	**|**	**-xxx...0...xxx W (kW, MW, GW)**
|	**|**	**|**	**-xxx...0...xxx var (kvar, Mvar, Gvar)**
|	**|**	**|**	**-xxx...0...xxx VA (kVA, MVA, GVA)**
|	**|**	**P**	Total Active Power
|	**|**	**Q**	Total Reactive Power
|	**|**	**S**	Total Apparent Power
|	**xxx A / 5 A**		
|	**xxx A / 1 A**		
xxx V / xxx V			

YQ xx07 general ordering code:

Device Type	Class	Zero position	Connection	Nominal voltage	Nominal current	Frequency range	Auxiliary supply	Current Connection	Service Comm.	Finish	Window	Dial	Index Type	Zero Adjuster Colour	Protection Cover	VT ratio	CT ratio	Scale Base
YQ x207	X	X	X	X	X	X	X	X	X	X	X	X	X	X	X	X	X	X

Scale Base
- A 0.5/1/0.5*
- B 0.3/1/0.3
- C 0.3/1/0.8
- D 0.8/1/0.3
- X I 0.1/1/0/1/0.1E
- Y Custom (appendix)

CT ratio
- xxxA/5A
- xxxA/1A

VT ratio
- x
- Y Yes*
- N No

Protection Cover
- S Black*
- W White

Not available if Finish is P, G, R or V

Index Type
- S Single Scale*
- D Double Scale

Dial
- S Standard with Scale*
- N Bianco Dial
- X No Dial

Window
- A Clear Glass*
- B Clear Glass + Red Adj. Index
- L Anti-Glare Glass
- D Anti-Glare + Red Adj. Index

Finish
- A Standard*
- H HVE (Tropical Seal)
- M Inc. Mech. Resistance
- S Ship Ver.
- P IP54
- G HVE + IP54
- R Ship Ver. + IP54
- T Ship Ver. + HVE
- V Ship Ver. + HVE + IP54

Service Comm.
- N Without*
- M Mini USB

Current Connection
- T Through Hole Transformer*
- C Screw Terminal Connector

Auxiliary supply
- X Internal L1-N
- Y Internal L1-L2
- A E 57,7 V
- B E 63,5 V
- C E 100 V
- D E 110 V
- E E 230 V
- F E 400 V
- J E 440 V

Frequency range
- S 50 Hz*
- T 60 Hz
- R 45...65 Hz

Nominal current
- 1A 1A
- 5A 5A

Nominal voltage

57P	57,7 V L-N	100L	100 V L-L	57V7	57,7/100 V
63P	63,5 V L-N	110L	110 V L-L	63V5	63,5/110 V
66P	66,4 V L-N	115L	115 V L-L	66V4	66,4/115 V
69P	69,3 V L-N	120L	120 V L-L	69V4	69,3/120 V

			100	100 V L-N	I	**220L**	220 V L-L	I	**110V**	110/190 V	I
			115	115 V L-N	I	**225L**	225 V L-L	I	**120V**	120/208 V	I
			127	127 V L-N	1B	**230L**	230 V L-L	I	**127V**	127/220 V	I
			130	130 V L-N	Connect.	**380L**	380 V L-L	3B and 3U	**130V**	130/225 V	4B and 4u
			132	132 V L-N	I	**400L**	400 V L-L	Connect	**132V**	132/230 V	Connect
			220	220 V L-N	I	**415L**	415 V L-L	I	**220V**	220/380 V	I
			230	230 V L-N	I	**440L**	440 V L-L	I	**230V**	230/400 V	I
			240	240 V L-N	I	**450L**	450 V L-L	I	**240V**	240/415 V	I
			250	250 V L-N	I	**460L**	460 V L-L	I	**254V**	254/440 V	I
			254	254 V L-N	/	**470L**	470 V L-L	I	**277V**	277/480 V	I
						480L	480 V L-L	I	**288V**	288/500 V	/
						500L	500 V L-L	/			
		1B	Single phase								
		3B	3 phase 3 wire balanced								
		3U	3 phase 3 wire unbalanced								
		4B	3 phase 4 wire balanced								
		4U	3 phase 4 wire unbalanced								
	L	0 / 1*									
S	1.5*										
H	1.0										

YQ 0107	Power Factor meter 144 mm 90°
YQ 0207	Power Factor meter 96 mm 90°
YQ 2107	Power Factor meter 144 mm 240°
YQ 2207	Power Factor meter 96 mm 240°

*_Default ordering

Example of ordering:

EQ 0207 meter will measure active power with 90° pointer (standard scale). It is connected directly to the three-phase 4-wire system with phase voltage 230 V_{L-N}, nominal current 5A and frequency range 50Hz. Device is powered from measuring circuit. It has no communication build in. Cut-out for panel is 96 x 96 and standard finish.

Example ordering code:

EQ 0207 S L 4U 230 V 5A S X T N A A S S S Y

EU DIRECTIVES:

Directive **2014 / 35 / EU** on low voltage.
Directive **2014 / 30EU** on electromagnetic compatibility.
Directive on RoHS 2011 / 65 / EU.

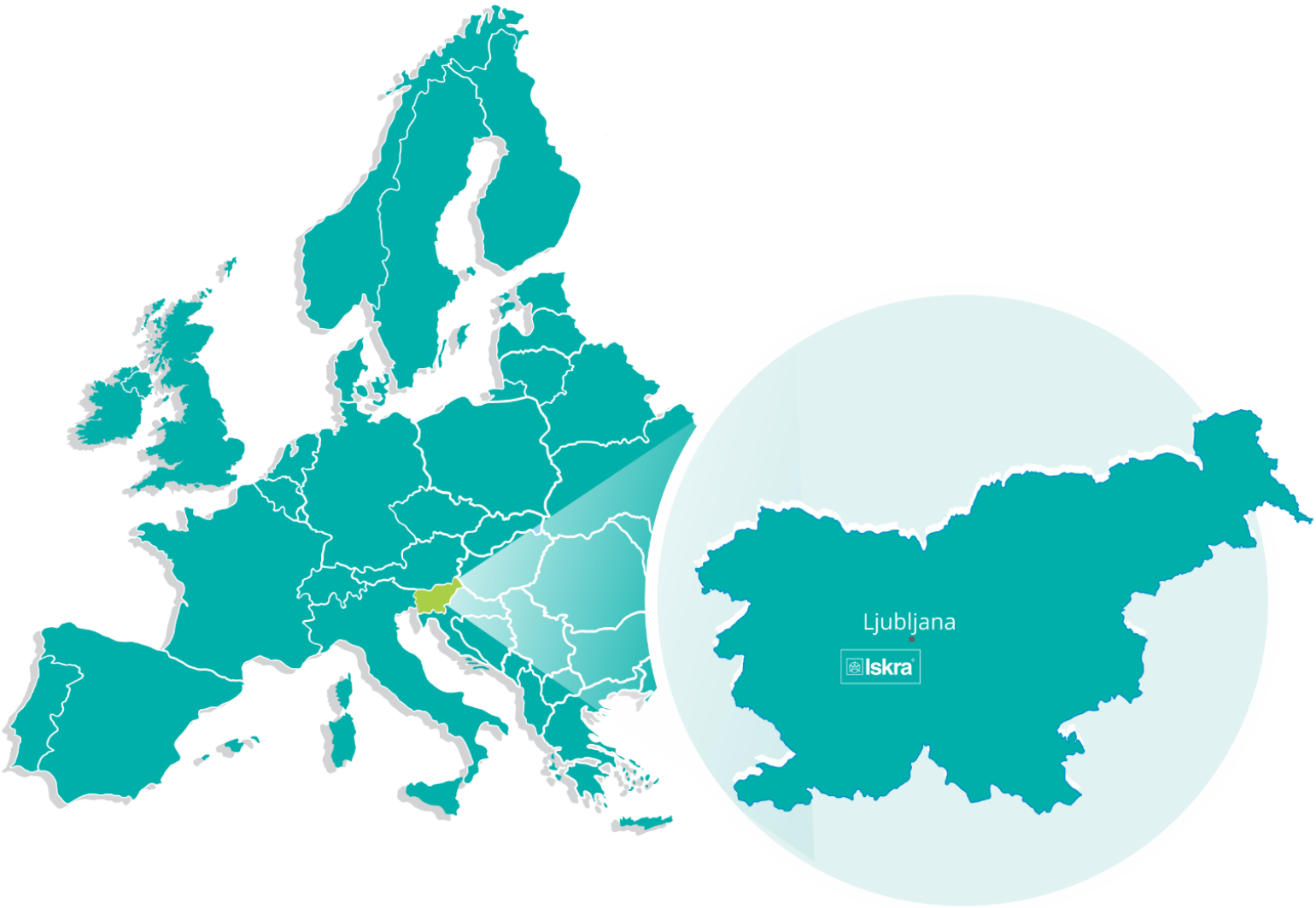

PE Ljubljana
Stegne 21
SI-1000 , Ljubljana
Phone: + 386 1 513 10 00

PE Kondenzatorji
Vajdova ulica 71
SI-8333 , Semič
Phone: +386 7 38 49 200

PE MIS
Ljubljanska c. 24a
SI-4000 , Kranj
Phone: +386 4 237 21 12

PE Baterije in potenciometri
Šentvid pri Stični 108
SI-1296 , Šentvid pri Stični
Phone: +386 1 780 08 00

PE Galvanotehnika
Glinek 5
SI-1291 , Škofljica
Phone: +386 1 366 80 50

Iskra IP, d.o.o.
Metliška cesta 8
SI-8333 , Semič
Phone: +386 7 384 94 54

Iskra Lotrič, d.o.o.
Otoče 5a
SI-4244 , Podnart
Phone: +386 4 535 91 68

Iskra ODM, d.o.o.
Otoče 5a
4244 , Podnart
Phone: +386 4 237 21 96

Iskra STIK, d.o.o.
Ljubljanska cesta 24a
SI-4000 , Kranj
Phone: +386 4 237 22 33

Iskra Tela L, d.o.o.
Omladinska 66
78250 , Laktaši
Phone: +387 51 535 890

Iskra Sistemi - M dooel
Ul, Dame Gruev br. 16/5 kat
1000 , Skopje
Phone: +389 75 444 498

Iskra Commerce, d.o.o.
Hadži Nikole Živkoviča br. 2
11000 , Beograd
Phone: +381 11 328 10 41

Iskra Hong Kong Ltd.
33 Canton Road, T.S.T.
1705 , China HK City
Phone: +852 273 00 917
+852 273 01 020

Iskra, d.o.o.
Stegne 21
SI-1000 Ljubljana, Slovenia

Phone: +386 (0) 1 513 10 00
www.iskra.eu

EN

Published by Iskra, d.o.o • Subject to change without notice • Version 5.00 October 2019 • EN P22.430.080