ENERGY SECTOR

# NETWORK RECORDER MC 750

- Measurements of instantaneous values of more than **140 quantities**.
- **Class S** measuring accuracy according to EN 61000-4-30.
- Voltage and current auto range measurements up to 1000 $V_{RMS}$, 12.5 A.
- **Wide frequency** measurement **range** 16 Hz – 400 Hz.
- Up to **three independent communication ports**.
- Support for **NTP real time synchronisation**.
- Up to **4 inputs/outputs**.

Iskra®

## FEATURES

- Measurements of instantaneous values of more than 140 quantities including harmonics, power line signalling voltage, unbalance, etc...
- Class S (0.2%) accuracy in compliance with EN 61000-4-30.
- Four quadrant energy measurement with class 0.5 S or 0.2 S for active energy (8 programmable energy counters, up to four tariffs, tariff clock, etc.).
- Automatic range selection of 3 current and 4 voltage channels (max. 12.5 A and 1000 $V_{RMS}$) with 32 kHz sampling rate.
- Recording all measured parameters including all voltage and current harmonics up to 63$^{rd}$, 32 adjustable alarms, anomalies and quality reports in the internal memory.
- Measurements of 40 minimal and maximal values in different time intervals (from 1 period to 256 periods).
- Frequency range from 16 Hz to 400 Hz.
- Up to three independent communication ports (RS232 or RS485 up to 115,200 bit/s, Ethernet and USB 2.0).
- MODBUS and DNP3 communication protocols.
- Support for NTP real time synchronisation.
- Up to 4 inputs and outputs (analogue inputs/outputs, digital inputs/outputs, alarm/watchdog outputs, pulse input/outputs, tariff inputs).
- Multilingual support.
- Universal power supply.
- 96 mm square panel mounting.
- User-friendly setting and evaluation software, MiQen.
- Extension unit with four configurable analogue outputs – EX104 (0.4 $mA_{DC}$ … 20 $mA_{DC}$, 0 $V_{DC}$ … 10 $V_{DC}$).

## DESCRIPTION

***MC 750 Network Recorder*** is an important device for permanent monitoring measuring and analysing single-phase or three-phase electrical power network.

The meter measures RMS value according to the principle of fast sampling of voltage and current signals. A built-in microprocessor calculates measurands (voltage, current, frequency, energy, power, power factor, THD phase angles, etc.) from the measured signals.

***MC 750*** performs measurements in compliance with regulatory requested standard EN 61000-4-30.

All required measurements and alarms can also be stored locally in an internal memory. With the RS232/RS485 or Ethernet/USB communication the meter can be set, measurements checked, and stored data downloaded.

## APPLICATION AND BENEFITS

***MC 750 Network recorder*** is intended for monitoring, measuring and recording of electrical quantities of a three-phase electric-energy distribution system.

Identifying relevant fixed measuring points is the most important task prior to complete system installation. This system itself will not prevent disturbances in network but it will help diagnose their origin and effects. This is possible only with system approach by using time synchronized meters with wide range of measuring parameters.

## COMPLIANCE WITH STANDARDS

***MC 750 Network recorder*** follows required procedures and meets the precision requirements for class S measuring device as described in standard IEC EN 61000-4-30.

| ***Standard EN*** | ***Description*** |
|---|---|
| *61010-1: 2010* | *Safety requirements for electrical equipment for measurement, control and laboratory use.* |
| *61557-12:2018* | *Electrical safety in LV distribution systems up to 1 kV a.c. and 1.5 kV d.c. – Combined performance measuring and monitoring devices for electrical parameters.* |
| *61000-4-30:2009* | *Electromagnetic compatibility (EMC) – Power quality measurements methods.* |
| *61000-4-7:2002 + A1:2009* | *Electromagnetic compatibility (EMC) – General guide on harmonics and inter-harmonics measurements.* |
| *50160:2011* | *Voltage characteristics of electricity supplied by public distribution networks.* |
| *62053-22:2003* | *Electricity metering equipment - Static meters for active energy (classes 0.2 S and 0.5 S).* |
| *62053-24:2014* | *Electricity metering equipment – Static meters for reactive energy at fundamental frequency (classes 0,5 S, 1 S and 1)* |
| *62053-23:2003* | *Electricity metering equipment -Static meters for reactive energy (classes 2 and 3).* |
| *61326-1:2006* | *EMC requirements for electrical equipment for measurement, control and laboratory use.* |
| *60529:1997/A1:2000* | *Degrees of protection provided by enclosures (IP code).* |
| *60068-2-1/ -2/ -6/ -27/-30* | *Environmental testing (-1 Cold, -2 Dry heat, -30 Damp heat, -6 Vibration, -27 Shock).* |
| *UL 94* | *Tests for flammability of plastic materials for parts in devices and appliances.* |

*Table 1:* ***List of applicable standards***

## MEASUREMENTS

### ONLINE MEASUREMENTS

**NOTE!**

In MiQen settings, software device will represent itself as MC 750A.

Online measurements are available on display or can be monitored with setting and monitoring software ***MiQen***.

Readings on display are performed continuously with refresh time dependent on set average interval whereas rate of readings monitored with ***MiQen*** is fixed and refreshed approx. each second.

For better overview over numerous readings, they are divided into several groups, which contain basic measurements, min. and max. values, harmonics and alarms.

Each group can represent data in visually favored graphical form or detailed tabular form. Latter allows freezing readings and/or copying data into various report generation software tools.

### INTERACTIVE INSTRUMENT

Additional communication feature of a device allows interactive handling with a dislocated device as if it would be operational in front of user.

This feature is useful for presentations or product training.

### SELECTION OF AVAILABLE QUANTITIES

Available online measuring quantities and their appearance can vary according to set type of power network and other settings such as; average interval, max. demand mode, reactive power calculation method …

Complete selection of available online measuring quantities is shown in a table on the next page.

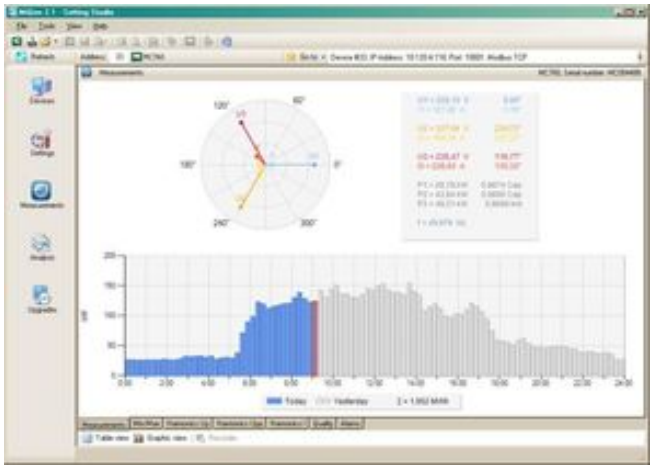

*Figure 3:* ***The sample of online measurements in graphical form – phase diagram and daily total active power consumption histogram***

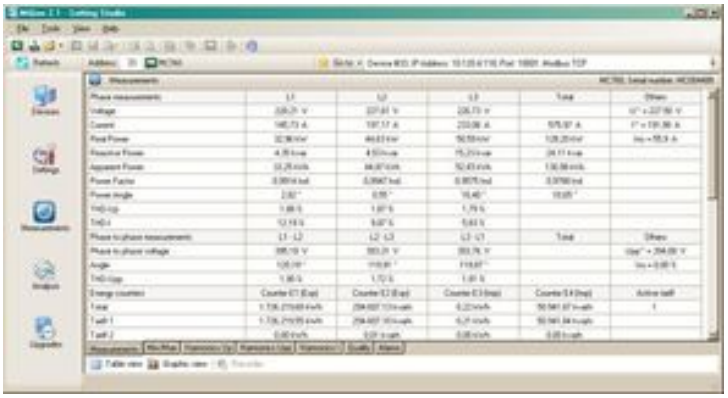

*Figure 4:* ***The sample of online measurements in tabular form***

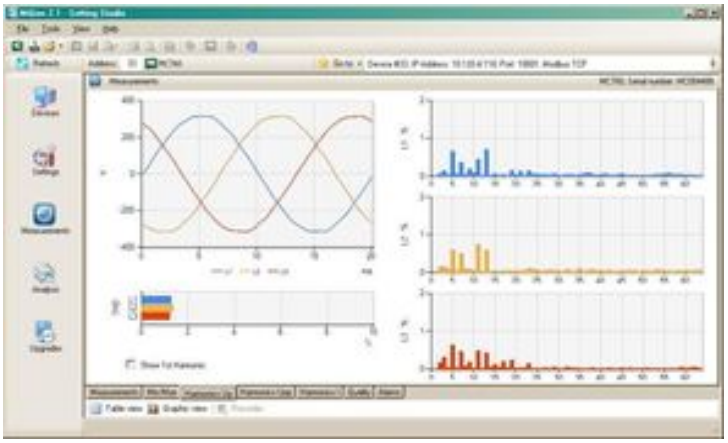

*Figure 5:* ***The sample of online harmonic measurements in graphical form***

| Meas. type | Measurement | 3-phase 4-wire | 3-phase 3-wire | 1-phase | comments |
|---|---|---|---|---|---|
| Phase measurements | *Voltage* | | | | |
| | $U_{1-3_RMS}$ | ☑ | | ☑1ph | |
| | $U_{AVG_RMS}$ | ☑ | | ☑ | |
| | $U_{1-3_DC}$ | ☑ | | ☑1ph | *DC component of phase voltages* |
| | *Current* | | | | |
| | $I_{1-3_RMS}$ | ☑ | ☑ | ☑1ph | |
| | $I_{TOT_RMS}$ | ☑ | ☑ | ☑ | |
| | $I_{AVG_RMS}$ | ☑ | ☑ | ☑ | |
| | $I_{NEUTRAL_calc}$ | ☑ | ☑ | ☑ | *Calculated neutral current* |
| | *Power* | | | | |
| | $P_{1-3_RMS}$ | ☑ | | ☑1ph | |
| | $P_{TOT_RMS}$ | ☑ | ☑ | ☑ | |
| | $Q_{1-3_RMS}$ | ☑📖 | | ☑1ph📖 | *Reactive power can be calculated as a squared difference between S and P or as delayed sample* |
| | $Q_{TOT_RMS}$ | ☑ | ☑ | ☑ | |
| | $S_{1-3_RMS}$ | ☑ | | ☑1ph | |
| | $S_{TOT_RMS}$ | ☑ | ☑ | ☑ | |
| | $Q_{fund1-3_RMS}$ | ☑📖 | | ☑1ph📖 | *Fundamental reactive power of first harmonics* |
| | $Q_{fundTOT_RMS}$ | ☑ | ☑ | ☑ | |
| | $PF_{1-3}$ | ☑ | | ☑1ph | |
| | $PF_{TOT}$ | ☑ | ☑ | ☑ | |
| | $\varphi_{1-3}$ | ☑ | | ☑1ph | *PA – Power angle* |
| | *Harmonic analysis* | | | | |
| | $THD\text{-}U_{1-3}$ | ☑ | | ☑1ph | |
| | $THD\text{-}I_{1-3}$ | ☑ | ☑ | ☑1ph | |
| | $TDD\text{-}I_{1-3}$ | ☑ | ☑ | ☑1ph | |
| | $U_{1-3_harmonic_1-63_\%}$ | ☑📖 | | ☑1ph📖 | *% of RMS or % of base* |
| | $U_{1-3_harmonic_1-63_ABS}$ | ☑ | | ☑1ph | |
| | $U_{1-3_harmonic_1-63_\varphi}$ | ☑ | | ☑1ph | |
| | $I_{1-3_harmonic_1-63_\%}$ | ☑📖 | ☑📖 | ☑1ph📖 | *% of RMS or % of base* |
| | $I_{1-3_harmonic_1-63_ABS}$ | ☑ | ☑ | ☑1ph | |
| | $I_{1-3_harmonic_1-63_\varphi}$ | ☑ | ☑ | ☑1ph | |
| *Phase to phase measurements* | *Voltage* | | | | |
| | $Upp_{1-3_RMS}$ | ☑ | ☑ | | |
| | $Upp_{AVG_RMS}$ | ☑ | ☑ | | |
| | $\varphi_{x-y}$ | ☑ | ☑ | | *Phase-to-phase angle* |
| | *Harmonic analysis* | | | | |
| | $THD\text{-}Upp_{1-3}$ | ☑ | ☑ | | |
| | $Upp_{1-3_harmonic_1-63_\%}$ | ☑📖 | ☑📖 | | *% of RMS or % of base* |
| | $Upp_{1-3_harmonic_1-63_ABS}$ | ☑ | ☑ | | |
| | $Upp_{1-3_harmonic_1-63_\varphi}$ | ☑ | ☑ | | |

| *Meas. type* | *Measurement* | *3-phase 4-wire* | *3-phase 3-wire* | *1-phase* | *comments* |
|---|---|---|---|---|---|
| *Metering* | *Energy* | | | | |
| | Counter $E_{1-8}$ | ☑ | ☑ | ☑ | *Each counter can be dedicated to any of four quadrants (P-Q, import-export, L-C). Total energy is a sum of one counter for all tariffs. Tariffs can be fixed, date/time dependent or tariff input dependent* |
| | $E_{TOT_1-8}$ | ☑ | ☑ | ☑ | |
| | Active tariff | ☑ | ☑ | ☑ | |
| | $Cost_by_meters_{1-4}$ | ☑ | ☑ | ☑ | *Calculated costs depend on specified price per hour and currency* |
| | $Cost_{1-4_TOT}$ | ☑ | ☑ | ☑ | |
| *Maximum demand measurements* | *Maximum demand* | | | | |
| | $MD_I_{1-3}$ | ☑ | ☑ | ☑1ph | |
| | $MD_P_{import}$ | ☑ | ☑ | ☑ | |
| | $MD_P_{export}$ | ☑ | ☑ | ☑ | |
| | $MD_Q_{ind}$ | ☑ | ☑ | ☑ | |
| | $MD_Q_{cap}$ | ☑ | ☑ | ☑ | |
| | MD_S | ☑ | ☑ | ☑ | |
| *Min and max measurements* | *Min and max* | | | | |
| | $U_{1-3_RMS_MIN}$ | ☑ | | ☑1ph | |
| | $U_{1-3_RMS_MAX}$ | ☑ | | ☑1ph | |
| | $Upp_{1-3_RMS_MIN}$ | ☑ | ☑ | ☑ | |
| | $Upp_{1-3_RMS_MAX}$ | ☑ | ☑ | ☑ | |
| | $I_{1-3_RMS_MIN}$ | ☑ | ☑ | ☑1ph | |
| | $I_{1-3_RMS_MAX}$ | ☑ | ☑ | ☑1ph | |
| | $P_{1-3_RMS_MIN}$ | ☑ | | ☑1ph | |
| | $P_{1-3_RMS_MAX}$ | ☑ | | ☑1ph | |
| | $P_{TOT_RMS_MIN}$ | ☑ | ☑ | ☑1ph | |
| | $P_{TOT_RMS_MAX}$ | ☑ | ☑ | ☑1ph | |
| | $S_{1-3_RMS_MIN}$ | ☑ | | ☑1ph | |
| | $S_{1-3_RMS_MAX}$ | ☑ | | ☑1ph | |
| | $S_{TOT_RMS_MIN}$ | ☑ | ☑ | ☑1ph | |
| | $S_{TOT_RMS_MAX}$ | ☑ | ☑ | ☑1ph | |
| | $freq_{MIN}$ | ☑ | ☑ | ☑ | |
| | $freq_{MAX}$ | ☑ | ☑ | ☑ | |
| *Other measurements* | *Miscellaneous* | | | | |
| | $freq_{MEAN}$ | ☑ | ☑ | ☑ | |
| | Internal temp. | ☑ | ☑ | ☑ | |
| | Date, Time | ☑ | ☑ | ☑ | |
| | Last Sync. time | ☑📖 | ☑📖 | ☑📖 | *UTC* |

📖 For more information see ***MC 7×0A Power Monitoring Device*** User's manual

*Table 3:* ***Selection of available measurement quantities***

## DESCRIPTION OF PROPERTIES

### *RECORDER*

A built-in recorder (8 Mb) enables storing measurements, detected alarms and PQ reports with details. It supports recording of all measured quantities including voltage and current harmonics in 4 configurable partitions. For each partition is possible to set storage interval and other recording parameters.

Fifth partition is used for recording alarms. Each alarm triggered by pre-set limit lines is stored in a form of alarm i.d. and its timestamp.

### *Memory card*

***MC 750 Network Recorder*** is equipped with a front panel slot for full sized SD memory card that supports capacity up to 2 GB. It is intended for downloading internally stored data, uploading setting file and performing firmware upgrade.

### *Alarms*

Alarms are powerful tool for ***MC 750* Network Recorder** control and supervision features. Devices' performance can with this features reach beyond measuring and analyzing power network.

***MC 750* Network Recorder** supports recording and storing of 32 alarms in four groups. A time constant of maximal values in a thermal mode, a delay time and switch-off hysteresis are defined for each group of alarms.

For each parameter is possible to set limit value, condition and alarm activation action (sound signal and/or digital output switch if available).

All alarms are also stored in internal memory for post-analysis.

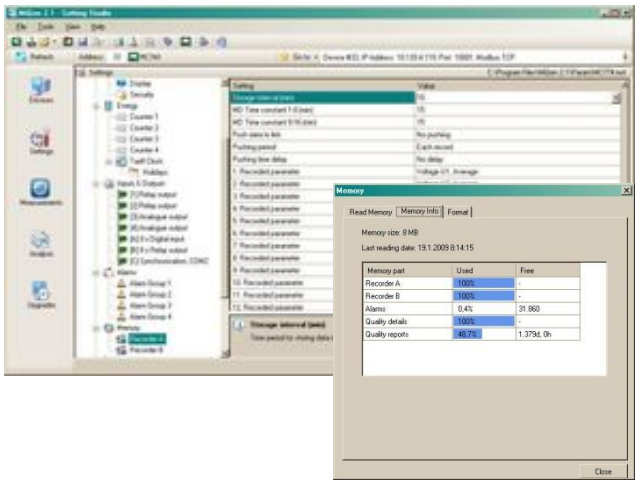

*Figure 6:* ***The sample of setting recorder parameters and viewing memory consumption information***

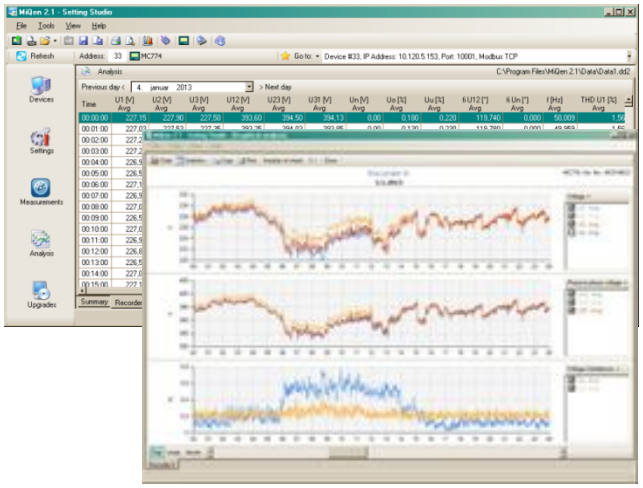

*Figure 7:* ***The sample of viewing recorder content in tabular and graphical form***

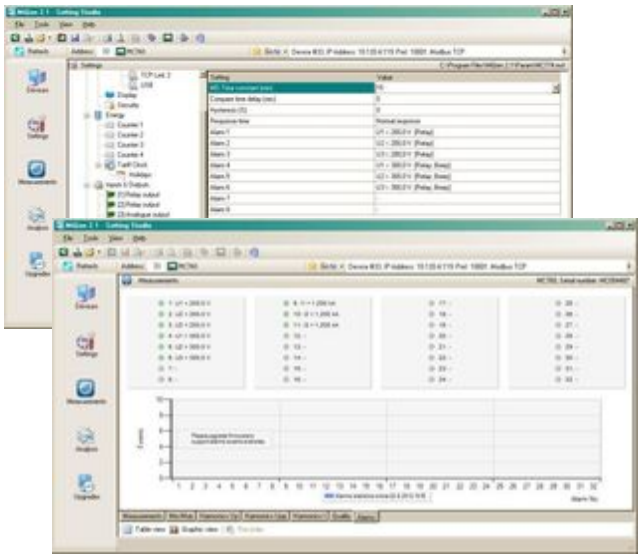

*Figure 8:* ***The sample of setting and viewing alarms***

## REAL TIME SYNCHRONISATION

Synchronized real-time clock (RTC) is an essential part of any Class A analyzer for proper chronological determination of various events.

To distinct cause from consequence, to follow a certain event from its origin to manifestation in other parameters it is very important that each and every event and recorded measurement on one instrument can be compared with events and measurements on other devices. Even if instruments are dislocated, which is normally the case in electro distribution network events have to be time-comparable with accuracy better than a single period.

For this purpose, instruments normally support highly accurate internal RTC. Still this is not enough, since temperature is location dependant and it influences its precision. For that reason, it is required to implement periodical RTC synchronization.

***MC 750 Network Recorder*** supports Network time protocol synchronization (NTP).

### *Network time protocol (NTP):*

Synchronization via Ethernet requires access to an NTP server.

**NOTE:** NTP can usually maintain time to within tens of milliseconds over the public Internet, but the accuracy depends on infrastructure properties - asymmetry in outgoing and incoming communication delay affects systematic bias. It is recommended that dedicated network rather than public network is used for synchronisation purposes.

## COMMUNICATION

***MC 750 Network Recorder*** has a wide variety of communication possibilities to suit specific demands. It is equipped with standard communication port COM1 and auxiliary communication port COM2. This allows two different users to access data from a device simultaneously and by using TCP/IP communication, data can be accessed worldwide.

COM2 port is optional and can be ordered as one of I/O modules.

Different configurations are possible (to be specified with an order).

| *Configuration* | *COM1* | *COM2* |
|---|---|---|
| *1* | *RS232/485* | */* |
| *2* | *RS232/485* | *RS232 or RS485* |
| *3*[(1)] | *Ethernet & USB* | */* |
| *4*[(1)] | *Ethernet & USB* | *RS232 or RS485* |

[(1)] *Galvanic separation between Eth. and USB is 1 kVACRMS*

*Table 4:* ***List of communication configurations***

***MC 750 Network Recorder*** supports standard communication protocols MODBUS RTU, TCP and DNP3 L1.

Additionally, it supports proprietary PUSH communication mode, which is used in system applications where devices send predefined readings in predefined time intervals in XML format. Web based software MiSMART collects data and stores it into database. Stored data can then be viewed with MiSMART client software.

For more information about PUSH communication mode and XML format see ***MC 750 Network Recorder*** User's manual.

*Figure 9:* ***MiSMART client window***

### *Analogue extender EX104 (accessory)*

If there is a demand for additional analogue outputs analogue extender EX104 can be used.

It is a standalone unit, connected to meter via module 2 (module for communication with EX104 needs to be specified at order). Up to 4 analogue outputs can be used with one meter. More information can be found in Analogue extender EX104 data sheet (E P22.495.400).

## TECHNICAL DATA

### *Measurement inputs*

| | |
|---|---|
| *Nominal frequency range* | *50 Hz, 60 Hz* |
| *Measuring frequency range* | *16 Hz–400 Hz* |

**Voltage measurements:**

| | |
|---|---|
| *Number of channels* | *4* [(1)] |
| *Sampling rate* | *32 kHz* |
| *Min. voltage for sync.* | *1 $V_{rms}$* |
| *Nominal value ($U_N$)* | *500 $V_{LN}$ , 866 $V_{LL}$* |
| *Max. measured value (cont.)* | *600 $V_{LN}$; 1000 $V_{LL}$* |
| *Max. allowed value* | *1.2 × $U_N$ permanently*<br>*2 × $U_N$ ; 10 s* |
| *Consumption* | *< $U^2$ / 4.2MΩ per phase* |
| *Input impedance* | *4.2MΩ per phase* |

(1) 4th channel is used for measuring $U_{EARTH-NEUTRAL}$

**Current measurements:**

| | |
|---|---|
| *Number of channels* | *3* |
| *Sampling rate* | *32 kHz* |
| *Nominal value ($I_{NOM}$)* | *1 A, 5 A* |
| *Max. measured value ($I_1$-$I_3$ only)* | *12.5 A sin.* |
| *Max. allowed value (thermal)* | *15 A cont.*<br>*≤ 300 A; 1s* |
| *Consumption* | *< $I^2$ × 0.01Ω per phase* |

### *Basic accuracy under reference conditions*

*Accuracy is presented as percentage of reading of the measurand except when it is stated as an absolute value.*

| Measurand | Accuracy class | According to |
|---|---|---|
| Voltage L-N, L-L | 0.2 | EN 61557-12 |
| Current | 0.2 | EN 61557-12 |
| Active power ($I_N$ = 5 A) | 0.2 | EN 61557-12 |
| Active power ($I_N$ = 1 A) | 0.5 | EN 61557-12 |
| Active energy | 0.5S | EN 62053-22 |
| Reactive energy | 1 | EN 62053-24 |
| Frequency (f) | 0.02 Class A | EN 61557-12 |
| Power factor (PF) | 0.5 | EN 61557-12 |
| THD (U) | 0.3 Class I / A | EN 61557-12 |
| THD (I) | 0.3 | EN 61557-12 |
| Real time clock (RTC) | < ± 1 s/day | IEC 61000-4-30 |

For complete overview of accuracy for all measured parameters and measuring ranges see Users' manual.

### *INPUT/OUTPUT modules*

***MC 750 Network Recorder*** is equipped with two main I/O slots. According to order, each slots' function can be as presented in a table below.

| *Module type* | *Number of I/O per module* |
|---|---|
| *Relay output (RO)* | *2* |
| *Analogue output (AO)* | *2 x 20 mA* |
| *Analogue input (AI)* | *2* |
| *Pulse output (PO)* | *2* |
| *Pulse input (PI)* | *2* |
| *Bistable Digital output (BO)* | *1* |
| *Digital output (DO)* | *2* |
| *Digital input (DI)* | *2* |
| *Tariff input (TI)* | *2* |
| *Additional communication port (COM2)* | *1* |
| *Status output (WO)* | *1 + 1xRO* |
| *Communication port for analogue extender EX104* | *1* |

*Table 5:* ***List of available I/O modules***

**Analogue input:**

Three types of analogue inputs are suitable for acquisition of low voltage DC signals from different sensors. According to application requirements it is possible to choose current, voltage or resistance (temperature) analogue input. They all use the same output terminals.

MiQen software allows setting an appropriate calculation factor, exponent and required unit for representation of primary measured value (temperature, pressure, wind speed …)

***DC current input:***

| | |
|---|---|
| *Nominal input range* | *–20 mA…0…20 mA (±20%)* |
| *Input resistance* | *20 Ω* |
| *Accuracy* | *0.5 % of range* |
| *Temperature drift* | *0.01% / °C* |
| *Conversion resolution* | *16 bit (sigma-delta)*<br>*internally referenced* |
| *Analogue input mode* | *Single-ended* |

***DC voltage input:***

| | |
|---|---|
| *Nominal input range* | *–10 V…0…10 V (±20%)* |
| *Input resistance* | *100 kΩ* |
| *Accuracy* | *0.5 % of range* |
| *Temperature drift* | *0.01% / °C* |
| *Conversion resolution* | *16 bit (sigma-delta) internally referenced* |
| *Analogue input mode* | *Single-ended* |

***Resistance (temperature) input:***

| | |
|---|---|
| *Nominal input range (low)** | *0 Ω - 200 Ω (max. 400 Ω)*<br>*PT100 (-200°C–850°C)* |
| *Nominal input range (high)** | *0 kΩ – 2 kΩ (max. 4 kΩ)*<br>*PT1000 (-200°C–850°C)* |
| *Connection* | *2-wire* |
| *Accuracy* | *0.5 % of range* |
| *Conversion resolution* | *16 bit (sigma-delta) internally referenced* |
| *Analogue input mode* | *Single-ended* |

**** Low or high input range and primary input value (resistance or temperature) are set by the MiQen setting software***

**Analogue output:**

| | |
|---|---|
| *Output range* | *0 mA…20 mA* |
| *Accuracy* | *0.5% of range* |
| *Max. burden* | *150 Ω* |
| *Linearization* | *Linear, Quadratic* |
| *No. of break points* | *5* |
| *Output value limits* | *± 120% of nominal output* |
| *Response time (measurement and analogue output)* | *depends on set general average interval (0.1 s – 5 s)* |
| *Residual ripple* | *< 1 % p.p.* |

Outputs may be either short or open-circuited. They are electrically insulated from each other and from all other circuits.

Output range values can be altered subsequently (zoom scale) using the setting software, but a supplementary error results.

**Digital input:**

| | |
|---|---|
| *Purpose* | *Tariff input, Pulse input, General purpose digital input* |

***Tariff input***

| | |
|---|---|
| *No. of inputs per module* | *2* |
| *Rated voltage* | *5 V…48 $V_{AC/DC}$**<br>*110 ± 20 % $V_{AC/DC}$**<br>*230 ± 20 %$V_{AC/DC}$**<br>**Depends on a build in hardware* |
| *Frequency range* | *45 Hz…65 Hz* |

***Pulse input***

| | |
|---|---|
| *No. of inputs per module* | *2* |
| *Rated voltage* | *5 V- 48 $V_{DC}$ (±20 %)* |
| *Max. current* | *8 mA (at 48 $V_{DC}$ + 20 %)* |
| *Min. pulse width* | *0.5 ms* |
| *Min. pulse period* | *2 ms* |
| *SET voltage* | *(40...120) % of rated voltage* |
| *RESET voltage* | *(0...10) % of rated voltage* |

***General purpose digital input***

| | |
|---|---|
| *No. of inputs per module* | *2* |
| *Voltage* | *5 V…48 $V_{AC/DC}$**<br>*110 ± 20 % $V_{AC/DC}$**<br>*230 ± 20 %$V_{AC/DC}$**<br>**Depends on a build in hardware* |

**Digital output:**

| | |
|---|---|
| ***Type*** | *Relay switch* |
| *No. of outputs per module* | *2* |
| *Purpose* | *Alarm output, General purpose Digital output, Pulse output, Status output (watchdog)* |
| *Rated voltage* | *230 $V_{AC/DC}$ ± 20% max* |
| *Max. switching current* | *1000 mA* |
| *Contact resistance* | *≤ 100 mΩ (100 mA, 24 V)* |
| *Impulse* | *Max. 4000 imp/hour*<br>*Min. length 100 ms* |

| | |
|---|---|
| ***Type*** | *Bistable Relay switch* |
| *No. of outputs per module* | *1* |
| *Purpose* | *Alarm output, General purpose digital output* |
| *Max. switching power* | *40 VA* |
| *Rated voltage* | *230 $V_{AC/DC}$ ± 20% max* |
| *Max. switching current* | *1000 mA* |
| *Contact resistance* | *≤ 100 mΩ (100 mA, 24 V)* |

| | |
|---|---|
| ***Type*** | *Optocoupler open collector switch* |
| *No. of outputs per module* | *2* |
| *Purpose* | *Pulse output* |
| *Rated voltage* | *40 $V_{AC/DC}$* |
| *Max.switching* | *30 mA ($R_{ONmax}$ = 8 Ω)* |
| *Pulse length* | *programmable (2 ms… 999 ms)* |

| | |
|---|---|
| ***Type*** | *Relay switch* |
| *No. of outputs* | *1 x watchdog + 1 x relay output* |
| *Normal operation* | *Relay in ON position* |
| *Failure detection delay* | *≈ 1.5 s* |
| *Rated voltage* | *230 $V_{AC/DC}$ ±20 % max* |
| *Max. switching current* | *1000 mA* |
| *Contact resistance* | *≤ 100 mΩ (100 mA, 24 V)* |

### Power Supply

| | |
|---|---|
| *Standard:* | *CAT III 300V* |
| *Nominal voltage AC* | *48 V… 276 V* |
| *Nominal frequency* | *40 Hz… 65 Hz* |
| *Nominal voltage DC* | *20 V… 300 V* |
| *Consumption (max. all I/O)* | *< 8 VA* |
| *Power-on transient current* | *< 20 A; 1 ms* |
| | |
| *AC power supply* | *CAT III 300 V* |
| *Nominal voltage AC* | *110 V, 230 V or 400 V* |
| *Nominal frequency* | *40 Hz… 65 Hz* |
| *Consumption (max. all I/O)* | *< 8 VA* |

### Safety

| | |
|---|---|
| *Safety:* | *protection class **II*** |
| ⓪ ⑩ | *functional earth terminal must be connected to earth potential!* |
| | *Voltage inputs via high impedance* |
| | *Double insulation for I/O ports and COM ports* |
| *Pollution degree:* | *2* |
| *Test voltages:* | *$U_{AUX}$ against SELV circuits – 3.51 kV rms* |
| | *Other circuits to functional earth – 2.21 kV rms* |
| *EMC:* | *Directive on electromagnetic compatibility 2004/108/EC* |
| | *In compliance with EN 61326-1:2013 for industrial enviroment* |
| *Protection:* | *In compliance with EN 60592: 1997/A1:2000* |
| | *Front side (with protection cover for memory slot: IP40* |
| | *Rear side (with protection cover): IP20* |

### Mechanical

| | |
|---|---|
| *Dimensions* | *96 mm × 96 mm × 96.5 mm* |
| *Mounting* | *Panel mounting* |
| *Required mounting hole* | *96 mm × 96 mm*<br>*92 mm × 92 mm* |
| *Enclosure material* | *PC/ABS* |
| *Flammability* | *Acc. to UL 94 V-0* |
| *Weight* | *550 g* |
| *Enclosure material* | *PC/ABS*<br>*Acc. to UL 94 V-0* |

### Ambient conditions

| | |
|---|---|
| *Ambient temperature* | *K55 temperature class*<br>*Acc. to EN 61557-12*<br>*-10 °C …55 °C* |
| *Storage temperature* | *-40 °C to +70 °C* |
| *Ambient humidity* | *≤ 75% r.h. (no condensation)* |
| *Max. storage and transport humidity* | *≤ 90% r.h. (no condensation)* |
| *Voltage and Current max. temperature influence limit* | *± 20 ppm / K*<br>*(10 V-600 V; 0.05 A-10 A)*<br>*($T_{amb}$: -30°C to +70°C)* |

### Real time clock

A built-in real time clock is also without external synchronization very stable when device is connected to auxiliary power supply. For handling shorter power interruptions without influence on RTC, device uses high capacity capacitor battery. It ensures auxiliary supply (for internal RTC only) for more than two days of operation (6 years with battery).

To enable clock operation backup supercap or battery is built-in.

| | |
|---|---|
| *Supercap life span* | *approx. 2 days* |
| *Type* | *Low power embedded RTC* |
| *RTC stability* | *< 1 sec / day* |
| *Battery life span* | *approx. 6 years (at 23 °C)* |

### Connection cables

***MC 750 Network Recorder*** is equipped with European style pluggable terminals for measuring voltages, auxiliary supply, communication and I/O modules.

Measuring current cables can be connected in two ways. They shall be attached as through-hole connection without screwing or as detachable screw terminals.

**NOTE:** Stranded wire must be used with insulated end sleeve to assure firm connection.

| | |
|---|---|
| *Voltage inputs (4)* | *≤2.5 mm$^2$ , AWG 24-12 single wire* |
| *Current inputs (3)* | *≤Ø 6 mm one conductor with insulation* |
| *Supply (3)* | *≤2.5 mm$^2$ , AWG 24-12 single wire* |
| *Com (5), I/O (6)* | *≤2.5 mm$^2$ , AWG 24-12 single wire* |

### MiQen - setting and acquisition Software

MiQen software is intended for supervision of ***MC 750*** and many other instruments on a PC. Network and the device setting, display of measured and stored values and analysis of stored data in the device are possible via the serial, Ethernet or USB communication. The information and stored measurements can be exported in standard Windows formats. Multilingual software functions on Windows XP operating system or higher.

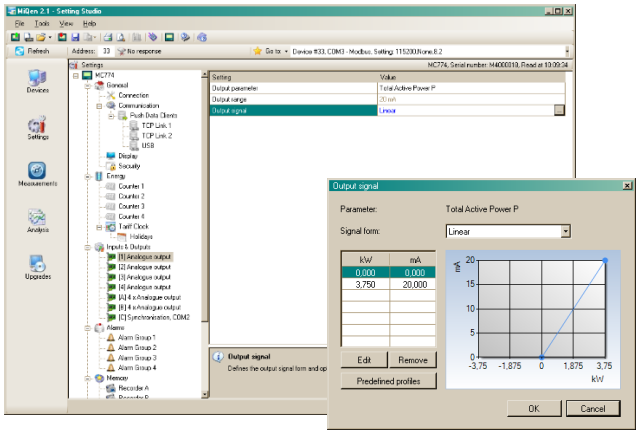


*Figure 9* ***MiQen setting and acquisition software***

MiQen software is intended for:

- Setting all of the instruments parameters (online and offline).
- Viewing current measured readings and stored data.
- Setting and resetting energy counters.
- Complete I/O modules configuration.
- Evaluation of the electricity supply quality in compliance with SIST EN 50160.
- Viewing and exporting time-stamped PQ anomaly details.
- Upgrading instruments firmware.
- Searching the net for devices.
- Virtual interactive instrument.
- Comprehensive help support.

**NOTE!**

MiQen software functions depend on the type of connected device.

## CONNECTION

Two possible connections of current are available, through-hole connection and terminal connection (see pictures below).

| ***System/connection*** | ***Through-hole connection assignment*** | ***Terminal connection assignment*** |
|---|---|---|
| *1b (1W1b)*<br><br>*Single-phase connection* | 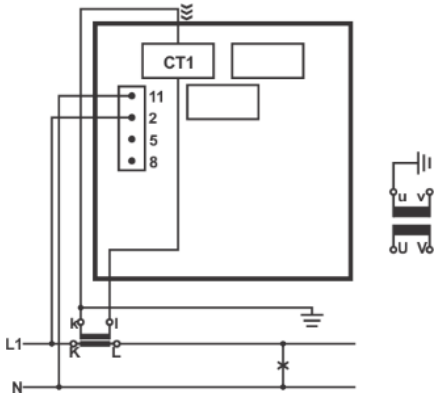 | 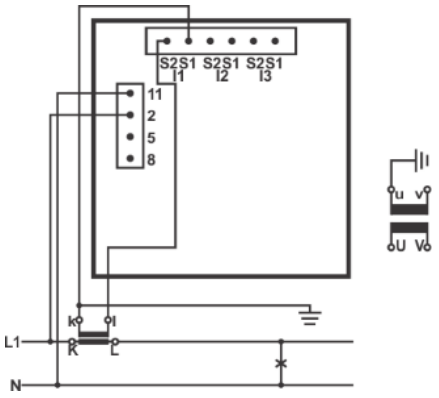 |
| *3b (1W3b)*<br><br>Three-phase, three-wire connection with balanced load | 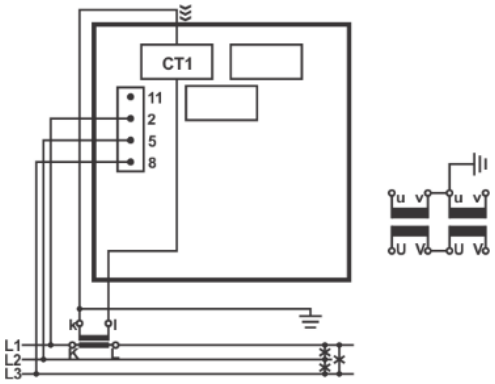 | 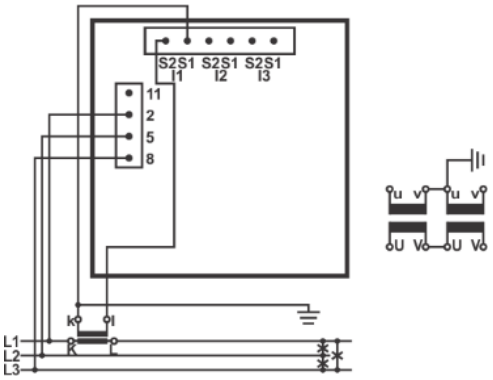 |
| *3u (2W3u)*<br><br>Three-phase, three-wire connection with unbalanced load. | 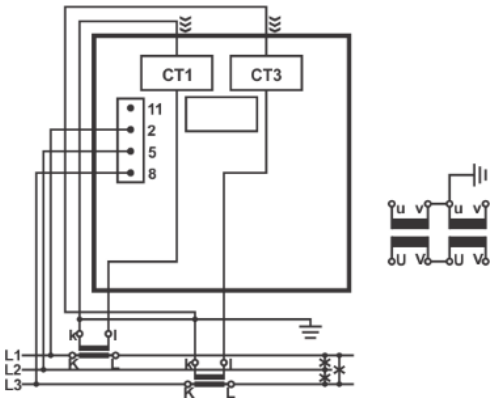 | 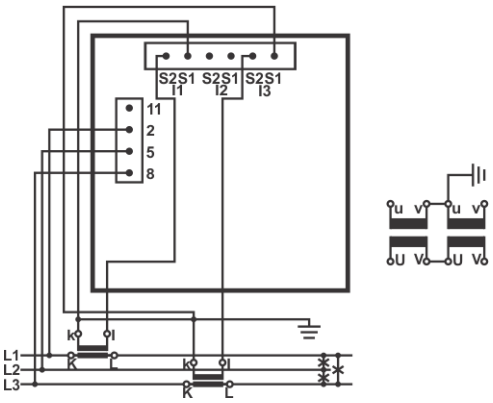 |

| System/connection | Through-hole connection assignment | Terminal connection assignment |
|---|---|---|
| *4b (1W4b)*<br>Three-phase, four wire connection with balanced load | 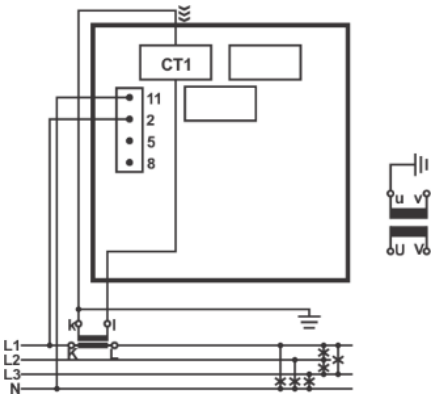 | 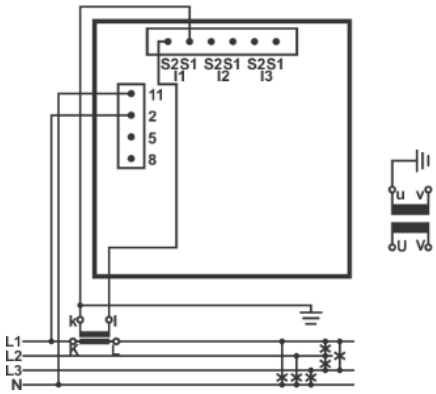 |
| *4u (3W4)*<br>Three-phase, four wire connection with unbalanced load. | 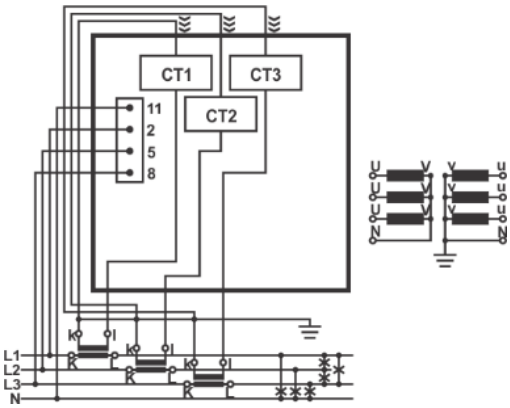 | 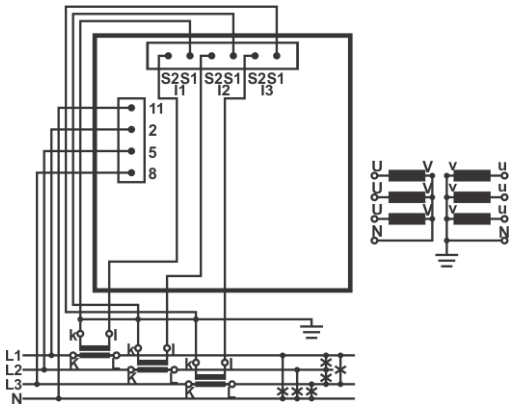 |

## DIMENSIONAL DRAWING

Dimensions for MC 750 (through-hole connection assignment):

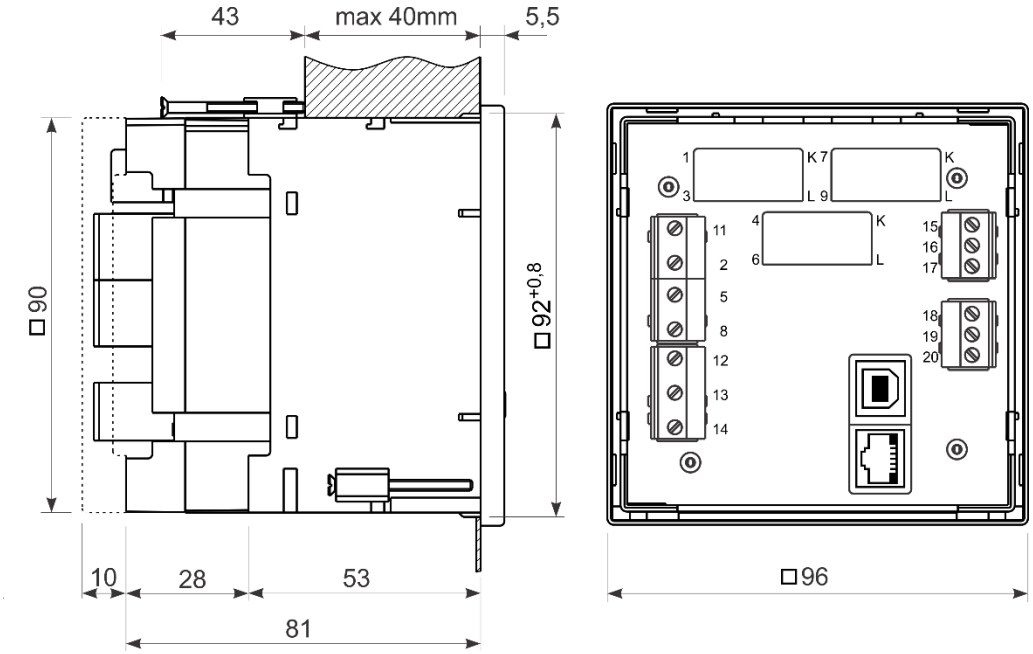


Dimensions for MC 750 (terminal connection assignment):

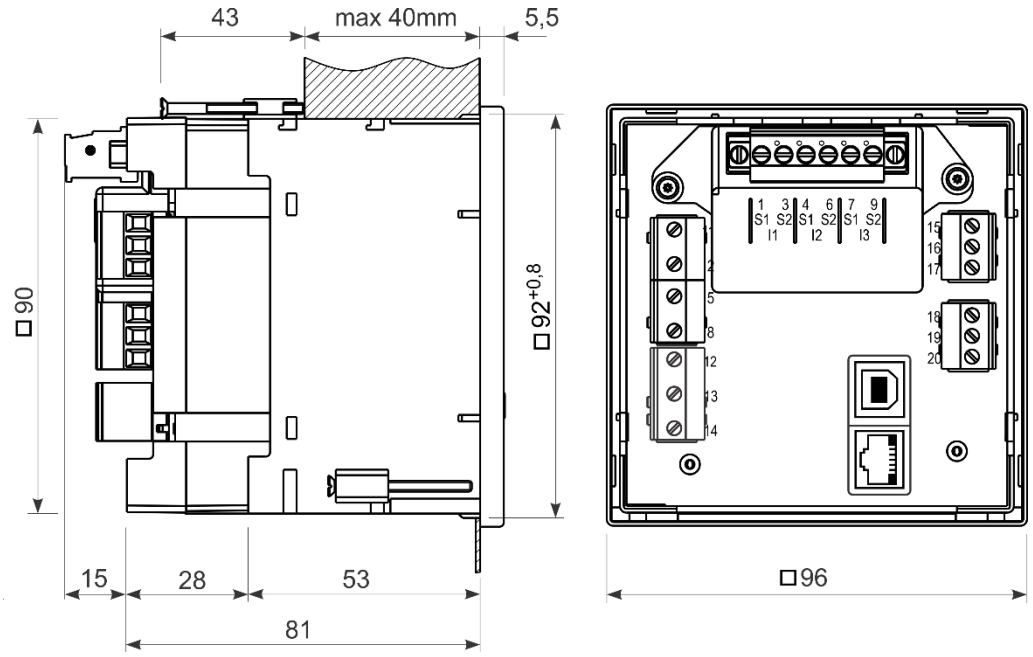

### Connection table

| Function | | | Connection | Comment |
|---|---|---|---|---|
| Measuring input: | AC current | IL1 | 1/3 | ⓪ CAT II 600V<br>CAT III 300V |
| | | IL2 | 4/6 | |
| | | IL3 | 7/9 | |
| | AC voltage | UL1 | 2 | ⓪ CAT II 600V<br>CAT III 300V |
| | | UL2 | 5 | |
| | | UL3 | 8 | |
| | | UN | 11 | |
| Inputs/outputs: | Module 1/2 | ❷+ | 15 | |
| | | ❷▤ (common) | 16 | |
| | | ❷+ | 17 | |
| | Module 3/4 | ❷+ | 18 | |
| | | ❷▤ (common) | 19 | |
| | | ❷+ | 20 | |
| Auxiliary power supply: | | + / AC (L) | 13 | ⓪ CAT III 300V<br>GROUND terminal must be always connected !! |
| | | – / AC (N) | 14 | |
| | | GROUND | 12 | |
| Communication: | RS485 | A | 21 | RS232 and RS485 are both supported, but only one at the time can be used!<br>In case of Ethernet/USB communication, terminals from 21 to 25 are not used (unconnected). |
| | | B | 22 | |
| | RS232 | RX | 23 | |
| | | GND | 24 | |
| | | TX | 25 | |
| Communication: DB9 female | RS232 | Rx | 3 | |
| | | ✐ | 5 | |
| | | Tx | 2 | |
| | RS485 | B | 7 | |
| | | A | 8 | |

*Table 6:* ***Connections***

## DATA FOR ORDERING

When ordering ***MC 750 Network Recorder***, all required specifications shall be stated in compliance with the ordering code. Additional information could be stated. Note that fixed or programmable specifications are not part of ordering code.

### *General ordering code*

The following specifications shall be stated:

| Device Type | Nominal freq. | Aux. power supply | Comm. COM1 | I/O module 1/2 | I/O module 3/4 | RTC backup supply | Current connection | | |
|---|---|---|---|---|---|---|---|---|---|
| **MC 750** | **X** | **X** | **X** | **X** | **X** | **X** | **X** | | |
| | \| | \| | \| | \| | \| | \| | \| | | |
| | \| | \| | \| | \| | \| | \| | **T** | Through Hole Transformer * | |
| | \| | \| | \| | \| | \| | \| | **C** | Screw Terminal Connector | |
| | \| | \| | \| | \| | \| | **C** | Supercap* | | |
| | \| | \| | \| | \| | \| | **B** | Battery | | |
| | \| | \| | \| | **N** | | Without * | | | |
| | \| | \| | \| | **A** | | 2× Analogue output | | Not available for Nominal freq. 16 2/3 Hz |
| | \| | \| | \| | **S** | | 2× Pulse output | | |
| | \| | \| | \| | **M** | | 2× Relay (alarm) output | | |
| | \| | \| | \| | **B** | | 1× Bistable relay (alarm) output | | |
| | \| | \| | \| | **W** | | 1× Status (Watchdog) + 1× Relay output | | |
| | \| | \| | \| | **I** | | 2× Analogue input - mA $_{DC}$ | | |
| | \| | \| | \| | **U** | | 2× Analogue input - V $_{DC}$ | | |
| | \| | \| | \| | **R** | | 2× Analogue input - R/Temp. | | |
| | \| | \| | \| | **P** | | 2× Pulse input 5 - 48 V $_{DC}$ | | |
| | \| | \| | \| | **D** | | 2× Digital input 230 V $_{AC/DC}$ | | |
| | \| | \| | \| | **E** | | 2× Digital input 110 V $_{AC/DC}$ | | |
| | \| | \| | \| | **F** | | 2× Digital input 5 - 48 V $_{AC/DC}$ | | |
| | \| | \| | \| | **T** | | 2× Tariff input 230 V $_{AC/DC}$ | | I/O module 1/2 only |
| | \| | \| | \| | **Z** | | 2× Tariff input 110 V $_{AC/DC}$ | | I/O module 1/2 only |
| | \| | \| | \| | **Y** | | 2× Tariff input 5 - 48 V $_{AC/DC}$ | | I/O module 1/2 only |
| | \| | \| | \| | **G** | | RS232 Communication - COM2 | | I/O module 3/4 only |
| | \| | \| | \| | **C** | | RS485 Communication - COM2 | | I/O module 3/4 only |
| | \| | \| | \| | **X** | | Output Extender - COM2 | | I/O module 3/4 only |
| | \| | \| | **T** | RS232/RS485 Terminal * | | | | |
| | \| | \| | **R** | RS232/RS485 DB9 | | | | |
| | \| | \| | **E** | Ethernet & USB | | | | |
| | \| | **U** | 20 ... 300 V $_{DC}$ , 48 ... 276 V $_{AC}$ * | | | | | |
| | \| | **D** | 110 V $_{AC}$ | | | | | |
| | \| | **E** | 230 V $_{AC}$ | | | | | |
| | \| | **F** | 400 V $_{AC}$ | | | | | |
| | **S** | 50, 60 Hz * | | | | | | |
| | **A** | 400 Hz | | | | | | |
| | **B** | 16 2/3 Hz | | | | | | |

***- standard**

### *Example of ordering:*

***MC 750*** with a universal supply is connected to 230 V voltage and 5 A secondary current on 50 Hz network. Ethernet & USB communication, watchdog output (plus one relay output) as I/O 1/2 and two pulse outputs as I/O 3/4. RTC with supercap supply. Through-hole type current transformers.

Voltage and current nominal value are due to auto-range fixed to max. nominal value and are therefore omitted from ordering code.

Connection type is user programmable and is therefore omitted from ordering code. Default is 4u connection.

Example ordering code:

**MC 750 S U E W S C T**

| | | | | | | |

| | | | | | | Through Hole Transformer

| | | | | | Supercap

| | | | | 2× Pulse output

| | | | 1× Status (Watchdog) + 1× Relay output

| | | Ethernet & USB

| | Universal (20 V DC... 300 V DC, 48 V AC... 276 V AC)

50 Hz, 60 Hz

## DICTIONARY:

| | |
|---|---|
| *PQ* | *Power Quality alias Voltage Quality* |
| *RMS* | *Root Mean Square* |
| *PA* | *Power angle (between current and voltage)* |
| *PF* | *Power factor* |
| *VT* | *Voltage measuring transformer* |
| *CT* | *Current measuring transformer* |
| *THD* | *Total harmonic distortion* |
| *Ethernet* | *IEEE 802.3 data layer protocol* |
| *MODBUS* | *Industrial protocol for data transmission* |
| *MiQen* | *ISKRA setting and acquisition Software* |
| *AC* | *Alternating quantity* |
| *RTC* | *Real Time Clock* |
| *IRIG* | *Inter-range instrumentation group time codes* |
| *NTP* | *Network Time Protocol* |

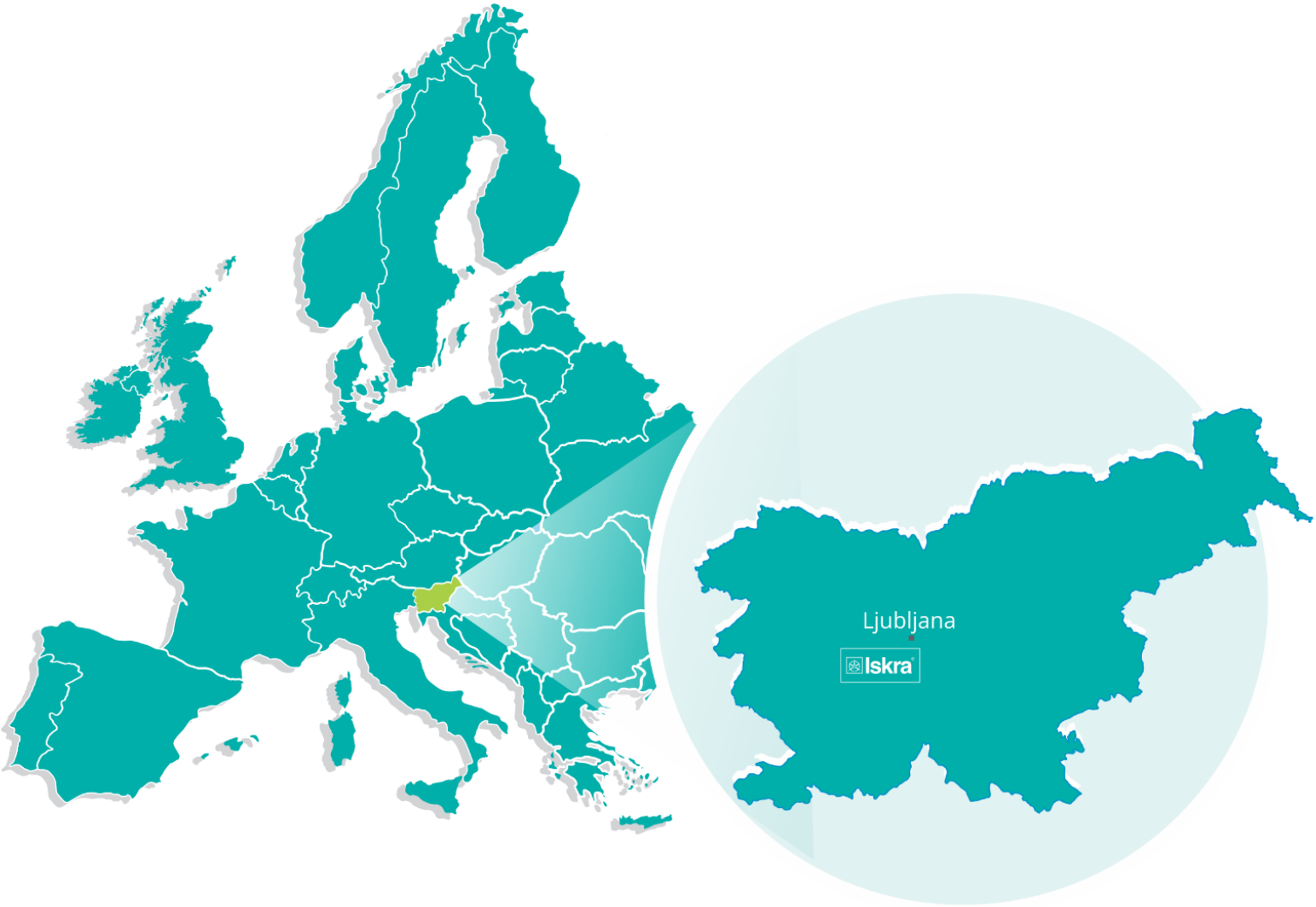


**Iskra, d.o.o.**
**BU Ljubljana**
Stegne 21
SI-1000 , Ljubljana
Phone: + 386 1 513 10 00

**Iskra, d.o.o.**
**BU Capacitors**
Vajdova ulica 71
SI-8333 , Semič
Phone: +386 7 38 49 200

**Iskra, d.o.o.**
**BU MIS**
Ljubljanska c. 24a
SI-4000 , Kranj
Phone: +386 4 237 21 12

**Iskra, d.o.o.**
**BU Batteries & Potentiometers**
Šentvid pri Stični 108
SI-1296 , Šentvid pri Stični
Phone: +386 1 780 08 00

**Iskra, d.o.o.**
**BU Electroplating**
Glinek 5
SI-1291 , Škofljica
Phone: +386 1 366 80 50

**Iskra IP, d.o.o.**
Vajdova ulica 71
SI-8333 , Semič
Phone: +386 7 384 94 54

**Iskra STIK, d.o.o.**
Ljubljanska cesta 24a
SI-4000 , Kranj
Phone: +386 4 237 22 33

**Iskra Lotrič, d.o.o.**
Otoče 5a
SI-4244 , Podnart
Phone: +386 4 535 91 68

**Iskra ODM, d.o.o.**
Otoče 5a
4244 , Podnart
Phone: +386 1 513 10 00

**Iskra Tela L, d.o.o.**
Omladinska 66
78250 , Laktaši
Phone: +387 51 535 890

**Iskra Sistemi - M dooel**
Ul, Dame Gruev br. 16/5 kat
1000 , Skopje
Phone: +389 75 444 498

**Iskra Commerce, d.o.o.**
Hadži Nikole Živkoviča br. 2
11000 , Beograd
Phone: +381 11 328 10 41

**Iskra Hong Kong Ltd.**
33 Canton Road, T.S.T.
1705 , China HK City
Phone: +852 273 00 917

Iskra®

**Iskra, d.o.o.**
Stegne 21
SI-1000 Ljubljana, Slovenia

Phone: +386 (0) 1 513 10 00
www.iskra.eu

EN

Published by Iskra, d.o.o. • Subject to change without notice • Version 1.02 June 2020 • EN P22.440.500