ENERGY SECTOR

POWER QUALITY ANALYZER MC 770

- **Class A** measuring accuracy according to EN 61000-4-30.
- **Evaluation of power quality** in compliance with EN 50160.
- Voltage and current auto range measurements up to 1000 V_{RMS}, 12.5 A.
- **Wide frequency** measurement **range** 16 Hz – 400 Hz.
- Up to **three independent communication ports**.
- Support for **NTP real time synchronisation**.
- Up to **4 inputs/outputs**.

Iskra®

FEATURES

- Evaluation of the electricity supply quality in compliance with EN 50160 with automatic report generation.
- Measurements of instantaneous values of more than 140 quantities including harmonics, flicker, power line signalling voltage, unbalance, etc...
- Class A (0.1%) accuracy in compliance with EN 61000-4-30.
- Four quadrant energy measurement with class 0.5 S or 0.2 S for active energy (8 programmable energy counters, up to four tariffs, tariff clock, etc.).
- Automatic range selection of 3 current and 4 voltage channels (max. 12.5 A and 1000 V_{RMS}) with 32 kHz sampling rate.
- Recording all measured parameters including all voltage and current harmonics up to 63rd, 32 adjustable alarms, anomalies and quality reports in the internal memory.
- Measurements of 40 minimal and maximal values in different time intervals (from 1 period to 256 periods).
- Frequency range from 16 Hz to 400 Hz.
- Up to three independent communication ports (RS232 or RS485 up to 115,200 bit/s, Ethernet and USB 2.0).
- MODBUS and DNP3 communication protocols.
- Support for NTP real time synchronisation.
- Up to 4 inputs and outputs (analogue inputs/outputs, digital inputs/outputs, alarm/watchdog outputs, pulse input/outputs, tariff inputs).
- Multilingual support.
- Universal power supply.
- 96 mm square panel mounting.
- User-friendly setting and evaluation software, MiQen.
- Extension unit with four configurable analogue outputs – EX104 (0.4 mA_{DC} … 20 mA_{DC}, 0 V_{DC} … 10 V_{DC}).

DESCRIPTION

MC 770 Power Quality Analyzer is an important device for permanent monitoring of power quality from its production (especially renewable), transmission, distribution to final consumers, who are most affected by insufficient quality of voltage. Lack of information about supplied quality of voltage can lead to unexplained production problems and malfunction or even damage to equipment used in production process. Therefore, ***MC 770*** can be used for utility purposes (evaluation against standards) as well as for industry purposes (monitoring supplied power quality).

MC 770 Power Quality Analyzer performs measurements in compliance with regulatory requested standard EN 61000-4-30 and evaluates recorded parameters for analysis according to parameters defined in European supply quality standard EN 50160:2011.

Moreover ***MC 770*** stores measurements and quality reports in internal memory for further analysis over recorded measurements. By accessing recorded or real time values from multiple instruments installed on different locations it is possible to gain the overall picture of systems' behaviour. This can be achieved regarding ***MC 770*** accurate internal real time clock and NTP synchronisation support, which assure accurate, time-stamped measurements from dislocated units.

All required measurements, weekly PQ reports and alarms can also be stored locally in an internal memory. Stored data can be then transferred to a memory card or accessed through communication for post analysis.

APPLICATION AND BENEFITS

MC 770 Power Quality Analyzer can be used as a standalone PQ monitoring device for detection of local PQ deviations. For this purpose it is normally positioned at the point-of-common-coupling (PCC) of small and medium industrial and commercial energy consumers to monitor quality of delivered electric energy or at medium or low voltage feeders to monitor, detect and record possible disturbances caused by (unauthorized) operation of consumers.

Identifying relevant fixed measuring points is the most important task prior to complete system installation. This system itself will not prevent disturbances in network but it will help diagnose their origin and effects. This is possible only with system approach by using time synchronized meters with wide range of measuring parameters.

Therefore, the most extensive benefits are achieved when ***MC 770*** is used as a part of an energy monitoring system comprising of strategically positioned meters connected to ***MiSMART*** software solution. This three-tier middleware software represents a perfect tool for utility companies, energy suppliers and other parties on both ends of supply-demand chain. ***MiSMART data collector*** with "push" communication system allows automatic recording of all predefined measuring parameters. They are stored in ***MiSMART database***, while leaving a copy of same parameters stored locally in memory of each device as a backup copy. Database records in XML format can be searched and viewed in tabular and graphical form using ***MiSMART client*** or other third-party application software.

Database records can involve numerous parameters of three-phase system, power quality parameters, physical parameters (temp., pressure, wind speed, etc.) as well as alarms and detailed time-stamped event logs.

COMPLIANCE WITH STANDARDS

Measurements and reports of power (voltage) quality (PQ) indexes are only useful when can be compared with measurements and reports from other PQ measuring devices in the supply network and evaluated against agreed limits for assessment of measured PQ indexes to establish an overall view about PQ issues in the network.

For this purpose, it is essential to follow guidelines described in series of international and local standards. Beside requirements for safe operation (LVD directive) and immunity against more and more demanding disturbances (EMC directive), PQ measuring depends on two levels of standardization.

Procedures for proper acquirement of PQ indexes, their timed aggregation and required accuracy are described in a standard IEC EN 61000-4-30 and two supplementary standards IEC EN 61000-4-7 (harmonics), IEC EN 61000-4-15 (flicker meter).

Procedures for evaluation of measured PQ indexes according to limit levels described in European standard EN 50160.

MC 770 Power Quality Analyzer follows required procedures and meets the precision requirements for class A measuring device as described in standard IEC EN 61000-4-30. It uses acquired measurements to perform automatic evaluation of PQ according to EN 50160 and issues weekly reports. In case if certain PQ indexes fail to meet required quality it also shows details of problematic measurements and time of occurrence of discrepancy.

Standard EN	***Description***
61010-1: 2010	*Safety requirements for electrical equipment for measurement, control and laboratory use.*
61557-12:2018	*Electrical safety in LV distribution systems up to 1 kV a.c. and 1.5 kV d.c. – Combined performance measuring and monitoring devices for electrical parameters.*
61000-4-30:2009	*Electromagnetic compatibility (EMC) – Power quality measurements methods.*
61000-4-7:2002 + A1:2009	*Electromagnetic compatibility (EMC) – General guide on harmonics and inter-harmonics measurements.*
61000-4-15:2010	*Electromagnetic compatibility (EMC) – Flicker meter.*
50160:2011	*Voltage characteristics of electricity supplied by public distribution networks.*
62053-22:2003	*Electricity metering equipment - Static meters for active energy (classes 0.2 S and 0.5 S).*
62053-24:2014	*Electricity metering equipment – Static meters for reactive energy at fundamental frequency (classes 0,5 S, 1 S and 1)*
62053-23:2003	*Electricity metering equipment -Static meters for reactive energy (classes 2 and 3).*
61326-1:2006	*EMC requirements for electrical equipment for measurement, control and laboratory use.*
60529:1997/A1:2000	*Degrees of protection provided by enclosures (IP code).*
60068-2-1/ -2/ -6/ -27/-30	*Environmental testing (-1 Cold, -2 Dry heat, -30 Damp heat, -6 Vibration, -27 Shock).*
UL 94	*Tests for flammability of plastic materials for parts in devices and appliances.*

Table 1: ***List of applicable standards***

VOLTAGE QUALITY

Voltage Quality is well defined term (sometimes also termed Power Quality – PQ) and is covered with a selection of parameters, each of which represents certain phenomenon. They represent only most common types of phenomena which can describe operation of electrical network with closest approximation.

MC 770 Power Quality Analyzer measures, detects, stores and evaluates parameters, which are defined in several standards. Evaluation is by default performed according to limits set in European standard EN 50150. Beside that users can always alter parameters according to their requirements or according to immunity of their equipment which operates within analyzed power network.

PQ recording settings

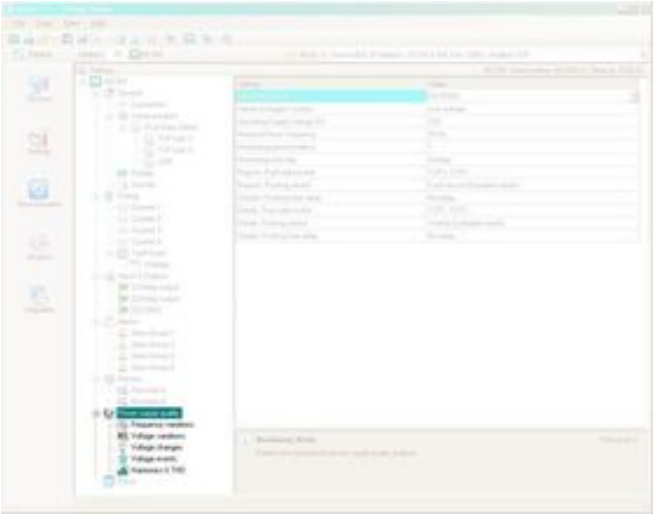

Figure 1: ***The sample of settings for power quality parameters are set with setting and monitoring software MiQen***

Characteristic parameters that describe power quality are shown in table 1.

Phenomena	PQ Parameters
Frequency variations	Frequency distortion
Voltage variations	Voltage fluctuation Voltage unbalance
Voltage changes	Rapid voltage changes Flicker
Voltage events	Voltage dips Voltage interruptions Voltage swells
Harmonics & THD	Harmonics Interharmonics Signalling voltage

Table 2: ***Voltage quality parameters as defined in EN 50160***

PQ reports

PQ report is issued on a basis of chosen PQ parameters as well as information about a period of tracking and place of tracking (type of network).

Each record is internally stored for later analysis. Settings software allows user to quickly view PQ report with limit lines and compliance results.

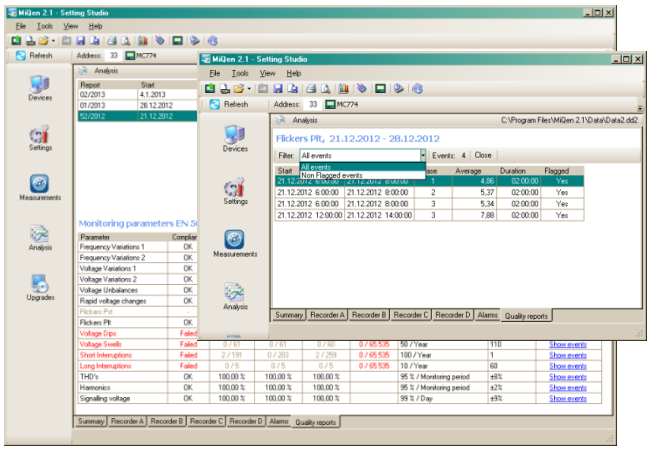

Figure 2: ***The sample of viewing power quality report parameters and log details with setting software MiQen***

To analyze in **details** which and when certain parameters are outside limit lines it is possible to view time stamped details and with that establish true origin of anomaly and its consequences.

MEASUREMENTS

ONLINE MEASUREMENTS

NOTE!

In MiQen settings, software device will represent itself as MC 770A.

Online measurements are available on display or can be monitored with setting and monitoring software ***MiQen***.

Readings on display are performed continuously with refresh time dependent on set average interval whereas rate of readings monitored with ***MiQen*** is fixed and refreshed approx. each second.

For better overview over numerous readings, they are divided into several groups, which contain basic measurements, min. and max. values, harmonics, interharmonics, PQ parameters and alarms.

Each group can represent data in visually favored graphical form or detailed tabular form. Latter allows freezing readings and/or copying data into various report generation software tools.

INTERACTIVE INSTRUMENT

Additional communication feature of a device allows interactive handling with a dislocated device as if it would be operational in front of user.

This feature is useful for presentations or product training.

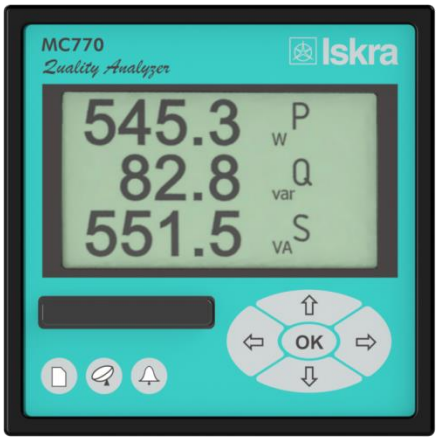

SELECTION OF AVAILABLE QUANTITIES

Available online measuring quantities and their appearance can vary according to set type of power network and other settings such as; average interval, max. demand mode, reactive power calculation method …

Complete selection of available online measuring quantities is shown in a table on the next page.

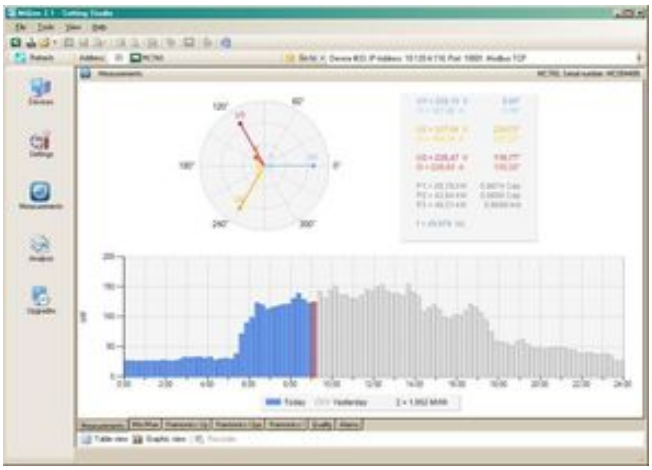

Figure 3: ***The sample of online measurements in graphical form – phase diagram and daily total active power consumption histogram***

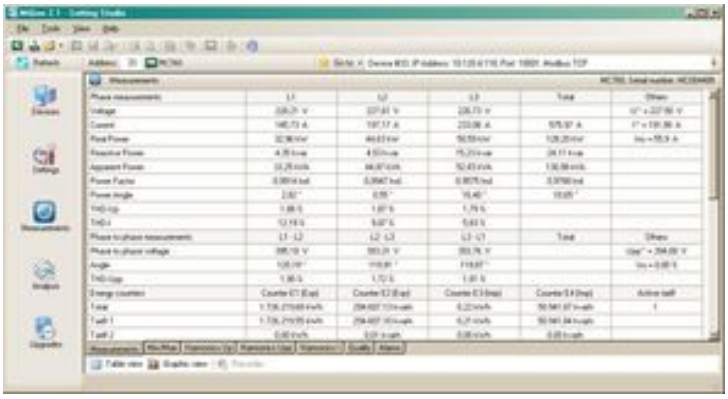

Figure 4: ***The sample of online measurements in tabular form***

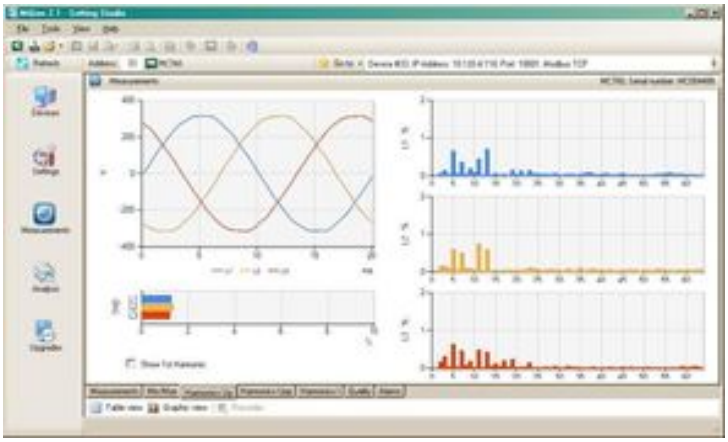

Figure 5: ***The sample of online harmonic measurements in graphical form***

Meas. type	Measurement	3-phase 4-wire	3-phase 3-wire	1-phase	comments
Phase measurements	*Voltage*				
	U_{1-3_RMS}	☑		☑1ph	
	U_{AVG_RMS}	☑		☑	
	$U_{unbalance_neg_RMS}$	☑📖	☑📖		
	$U_{unbalance_zero_RMS}$	☑📖	☑📖		
	U_{1-3_DC}	☑		☑1ph	*DC component of phase voltages*
	Current				
	I_{1-3_RMS}	☑	☑	☑1ph	
	I_{TOT_RMS}	☑	☑	☑	
	I_{AVG_RMS}	☑	☑	☑	
	$I_{NEUTRAL_calc}$	☑	☑	☑	*Calculated neutral current*
	Power				
	P_{1-3_RMS}	☑		☑1ph	
	P_{TOT_RMS}	☑	☑	☑	
	Q_{1-3_RMS}	☑📖		☑1ph📖	*Reactive power can be calculated as a squared difference between S and P or as delayed sample*
	Q_{TOT_RMS}	☑	☑	☑	
	S_{1-3_RMS}	☑		☑1ph	
	S_{TOT_RMS}	☑	☑	☑	
	$Q_{fund1-3_RMS}$	☑📖		☑1ph📖	*Fundamental reactive power of first harmonics*
	$Q_{fundTOT_RMS}$	☑	☑	☑	
	D_{1-3_RMS}	☑		☑1ph	*Deformed reactive power of harmonics*
	D_{TOT_RMS}	☑	☑	☑	
	PF_{1-3}	☑		☑1ph	
	PF_{TOT}	☑	☑	☑	
	dPF_{1-3}	☑		☑1ph	*Displacement Power Factor*
	dPF_{TOT}	☑	☑	☑	
	φ_{1-3}	☑		☑1ph	*PA – Power angle*
	Harmonic analysis				
	$THD\text{-}U_{1-3}$	☑		☑1ph	
	$THD\text{-}I_{1-3}$	☑	☑	☑1ph	
	$TDD\text{-}I_{1-3}$	☑	☑	☑1ph	
	$U_{1-3_harmonic_1-63_\%}$	☑📖		☑1ph📖	*% of RMS or % of base*
	$U_{1-3_harmonic_1-63_ABS}$	☑		☑1ph	
	$U_{1-3_harmonic_1-63_\varphi}$	☑		☑1ph	
	$U_{1-3_inter\text{-}harmonic_\%}$	☑📖		☑1ph📖	*Monitoring up to 10 different fixed frequencies. % of RMS or % of base*
	$U_{1-3_inter\text{-}harmonic_ABS}$	☑		☑1ph	
	$U_{1-3_signaling_\%}$	☑📖		☑1ph📖	*Monitoring of signaling (ripple) voltage of set frequency. % of RMS or % of base*
	$U_{1-3_signaling_ABS}$	☑		☑1ph	
	$I_{1-3_harmonic_1-63_\%}$	☑📖	☑📖	☑1ph📖	*% of RMS or % of base*
	$I_{1-3_harmonic_1-63_ABS}$	☑	☑	☑1ph	
	$I_{1-3_harmonic_1-63_\varphi}$	☑	☑	☑1ph	

Meas. type	Measurement	3-phase 4-wire	3-phase 3-wire	1-phase	comments
Phase measurements	Flickers				
	Pi_{1-3}	☑		☑1ph	Instantaneous flicker sensation measured with 150 samples / sec (original sampling is 1200 samples / sec)
	Pst_{1-3}	☑		☑1ph	10 min statistical evaluation (128 classes of CPF)
	Plt_{1-3}	☑		☑1ph	Derived from 12 Pst acc. to EN 61000-4-15
	Miscellaneous				
	K-factor$_{1-3}$	☑	☑	☑1ph	
	Current Crest factor I_{1-3}	☑	☑	☑1ph	
Phase to phase measurements	Voltage				
	Upp_{1-3_RMS}	☑	☑		
	Upp_{AVG_RMS}	☑	☑		
	φ_{x-y}	☑	☑		Phase-to-phase angle
	Harmonic analysis				
	THD-Upp_{1-3}	☑	☑		
	$Upp_{1-3_harmonic_1-63_\%}$	☑📖	☑📖		% of RMS or % of base
	$Upp_{1-3_harmonic_1-63_ABS}$	☑	☑		
	$Upp_{1-3_harmonic_1-63_\varphi}$	☑	☑		
	$Upp_{1-3_inter_harmonic_\%}$	☑	☑		Monitoring up to 10 different fixed frequencies. % of RMS or % of base
	$Upp_{1-3_inter_harmonic_ABS}$	☑	☑		
	$Upp_{1-3_signaling_\%}$	☑	☑		Monitoring of signaling (ripple) voltage of set frequency. % of RMS or % of base
	$Upp_{1-3_signaling_ABS}$	☑	☑		
	Flickers				
	Pi_pp_{1-3}		☑		Instantaneous flicker sensation measured with 150 samples / sec (original sampling is 1200 samples / sec)
	Pst_pp_{1-3}		☑		10 min statistical evaluation (128 classes of CPF)
	Plt_pp_{1-3}		☑		Derived from 12 Pst acc. to EN 61000-4-15
	Miscellaneous				
	$U_{underdeviation}$	☑	☑	☑1ph	Uunder. and Uover. are calculated for phase or phase-to-phase voltages regarding connection mode (only for MC 770)
	$U_{overdeviation}$	☑	☑	☑1ph	
Metering	Energy				
	Counter E_{1-8}	☑	☑	☑	Each counter can be dedicated to any of four quadrants (P-Q, import-export, L-C). Total energy is a sum of one counter for all tariffs. Tariffs can be fixed, date/time dependent or tariff input dependent
	E_{TOT_1-8}	☑	☑	☑	
	Active tariff	☑	☑	☑	
	$Cost_by_meters_{1-4}$	☑	☑	☑	Calculated costs depend on specified price per hour and currency
	$Cost_{1-4_TOT}$	☑	☑	☑	

Meas. type	Measurement	3-phase 4-wire	3-phase 3-wire	1-phase	comments
Maximum demand measurements	Maximum demand				
	MD_I_{1-3}	☑	☑	☑1ph	
	MD_P_{import}	☑	☑	☑	
	MD_P_{export}	☑	☑	☑	
	MD_Q_{ind}	☑	☑	☑	
	MD_Q_{cap}	☑	☑	☑	
	MD_S	☑	☑	☑	
Min and max measurements	Min and max				
	$U_{1-3_RMS_MIN}$	☑		☑1ph	
	$U_{1-3_RMS_MAX}$	☑		☑1ph	
	$Upp_{1-3_RMS_MIN}$	☑	☑	☑	
	$Upp_{1-3_RMS_MAX}$	☑	☑	☑	
	$I_{1-3_RMS_MIN}$	☑	☑	☑1ph	
	$I_{1-3_RMS_MAX}$	☑	☑	☑1ph	
	$P_{1-3_RMS_MIN}$	☑		☑1ph	
	$P_{1-3_RMS_MAX}$	☑		☑1ph	
	$P_{TOT_RMS_MIN}$	☑	☑	☑1ph	
	$P_{TOT_RMS_MAX}$	☑	☑	☑1ph	
	$S_{1-3_RMS_MIN}$	☑		☑1ph	
	$S_{1-3_RMS_MAX}$	☑		☑1ph	
	$S_{TOT_RMS_MIN}$	☑	☑	☑1ph	
	$S_{TOT_RMS_MAX}$	☑	☑	☑1ph	
	$freq_{MIN}$	☑	☑	☑	
	$freq_{MAX}$	☑	☑	☑	
Other measurements	Miscellaneous				
	$freq_{MEAN}$	☑	☑	☑	
	Internal temp.	☑	☑	☑	
	Date, Time	☑	☑	☑	
	Last Sync. time	☑🕮	☑🕮	☑🕮	*UTC*

🕮 For more information see ***MC 7×0A Power Monitoring Device*** User's manual

Table 3: ***Selection of available measurement quantities***

DESCRIPTION OF PROPERTIES

RECORDER

A built-in recorder (8 Mb) enables storing measurements, detected alarms and PQ reports with details. It supports recording of all measured quantities including voltage and current harmonics and inter-harmonics (up to 10 selected in a range to 63,5th) in 4 configurable partitions. For each partition is possible to set storage interval and other recording parameters.

Fifth partition is used for recording alarms. Each alarm triggered by pre-set limit lines is stored in a form of alarm i.d. and its timestamp.

Sixth partition is used for PQ reports. Each report in recorder is identified by a monitoring interval (date).

Last partition is used for PQ report details. They represent time stamped PQ values that are outside PQ limit lines.

Content of recorder can be viewed with monitoring software ***MiQen*** in a detailed tabular or visually favoured graphical form.

Memory card

MC 770 Power Quality Analyzer is equipped with a front panel slot for full sized SD memory card that supports capacity up to 2 GB. It is intended for downloading internally stored data, uploading setting file and performing firmware upgrade.

Alarms

Alarms are powerful tool for ***MC 770* Power *Quality Analyzer*** control and supervision features. Devices' performance can with these features reach beyond measuring and analyzing power network.

MC 770* Power *Quality Analyzer supports recording and storing of 32 alarms in four groups. A time constant of maximal values in a thermal mode, a delay time and switch-off hysteresis are defined for each group of alarms.

For each parameter is possible to set limit value, condition and alarm activation action (sound signal and/or digital output switch if available).

All alarms are also stored in internal memory for post-analysis.

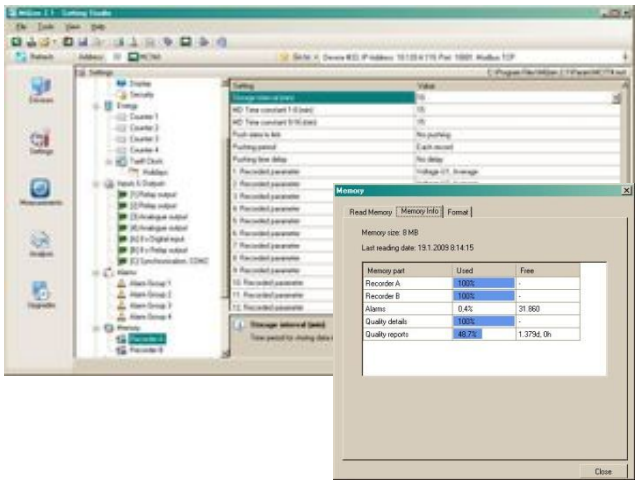

Figure 6: ***The sample of setting recorder parameters and viewing memory consumption information***

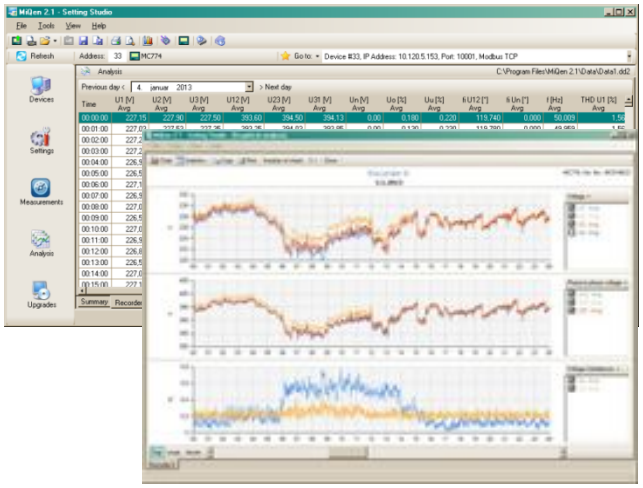

Figure 7: ***The sample of viewing recorder content in tabular and graphical form***

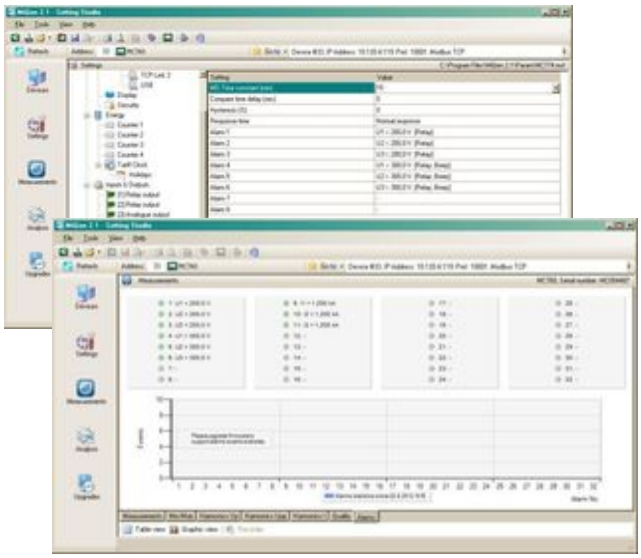

Figure 8: ***The sample of setting and viewing alarms***

REAL TIME SYNCHRONISATION

Synchronized real-time clock (RTC) is an essential part of any Class A analyzer for proper chronological determination of various events.

To distinct cause from consequence, to follow a certain event from its origin to manifestation in other parameters it is very important that each and every event and recorded measurement on one instrument can be compared with events and measurements on other devices. Even if instruments are dislocated, which is normally the case in electro distribution network events must be time-comparable with accuracy better than a single period.

For this purpose, instruments normally support highly accurate internal RTC. Still this is not enough, since temperature is location dependant and it influences its precision. For that reason, it is required to implement periodical RTC synchronization.

MC 770 Power Quality Analyzer supports Network time protocol synchronization (NTP).

Network time protocol (NTP):

Synchronization via Ethernet requires access to a NTP server.

NOTE: NTP can usually maintain time to within tens of milliseconds over the public Internet, but the accuracy depends on infrastructure properties - asymmetry in outgoing and incoming communication delay affects systematic bias. It is recommended that dedicated network rather than public network is used for synchronisation purposes.

COMMUNICATION

MC 770 Power Quality Analyzer has a wide variety of communication possibilities to suit specific demands. It is equipped with standard communication port COM1 and auxiliary communication port COM2. This allows two different users to access data from a device simultaneously and by using TCP/IP communication, data can be accessed worldwide.

COM2 port is optional and can be ordered as one of I/O modules.

Different configurations are possible (to be specified with an order).

Configuration	*COM1*	*COM2*
1	*RS232/485*	*/*
2	*RS232/485*	*RS232 or RS485*
3[(1)]	*Ethernet & USB*	*/*
4[(1)]	*Ethernet & USB*	*RS232 or RS485*

[(1)] *Galvanic separation between Eth. and USB is 1 kVACRMS*

Table 4: ***List of communication configurations***

MC 770 Power Quality Analyzer supports standard communication protocols MODBUS RTU, TCP and DNP3 L1.

Additionally, it supports proprietary PUSH communication mode, which is used in system applications where devices send predefined readings in predefined time intervals in XML format. Web based software MiSMART collects data and stores it into database. Stored data can then be viewed with MiSMART client software.

For more information about PUSH communication mode and XML format see ***MC 770 Power Quality Analyzer*** User's manual.

Figure 9: ***MiSMART client window***

Analogue extender EX104 (accessory)

If there is a demand for additional analogue outputs analogue extender EX104 can be used.

It is a standalone unit, connected to meter via module 2 (module for communication with EX104 needs to be specified at order). Up to 4 analogue outputs can be used with one meter. More information can be found in Analogue extender EX104 data sheet (E P22.495.400).

TECHNICAL DATA

Measurement inputs

Nominal frequency range	*50 Hz, 60 Hz*
Measuring frequency range	*16 Hz–400 Hz*

Voltage measurements:

Number of channels	*4* [(1)]
Sampling rate	*32 kHz*
Min. voltage for sync.	*1* V_{rms}
Nominal value (U_N)	*500* V_{LN} *, 866* V_{LL}
Max. measured value (cont.)	*600* V_{LN}*; 1000* V_{LL}
Max. allowed value	*1.2 ×* U_N *permanently*
	2 × U_N *; 10 s*
Consumption	*<* U^2 */ 4.2MΩ per phase*
Input impedance	*4.2MΩ per phase*

(1) 4th channel is used for measuring $U_{EARTH\text{-}NEUTRAL}$

Current measurements:

Number of channels	*3*
Sampling rate	*32 kHz*
Nominal value (I_{NOM})	*1 A, 5 A*
Max. measured value (I_1-I_3 *only)*	*12.5 A sin.*
Max. allowed value (thermal)	*15 A cont.*
	≤ 300 A; 1s
Consumption	*<* I^2 *× 0.01Ω per phase*

Basic accuracy under reference conditions

Accuracy is presented as percentage of reading of the measurand except when it is stated as an absolute value.

Measurand	Accuracy class	According to
Voltage L-N, L-L	0.1	EN 61557-12
Current	0.1	EN 61557-12
Active power (I_N = 5 A)	0.2	EN 61557-12
Active power (I_N = 1 A)	0.5	EN 61557-12
Active energy	Cl. 0.2S	EN 62053-22
Reactive energy	CL 0.5S	EN 62053-24
Frequency (f)	0.02 Class A	EN 61557-12
Power factor (PF)	0.5	EN 61557-12
THD (U)	0.3	EN 61557-12
THD (I)	0.3	EN 61557-12
Real time clock (RTC)	< ± 1 s/day	IEC61000-4-30

All values required for PQ analysis, which should be measured according to IEC61000-4-30 correspond to Class A accuracy.

For complete overview of accuracy for all measured parameters and measuring ranges see Users' manual.

INPUT/OUTPUT modules

MC 770 Power Quality Analyzer is equipped with two main I/O slots. According to order, each slots' function can be as presented in a table below.

Module type	*Number of I/O per module*
Relay output (RO)	*2*
Analogue output (AO)	*2 x 20 mA*
Analogue input (AI)	*2*
Pulse output (PO)	*2*
Pulse input (PI)	*2*
Bistable Digital output (BO)	*1*
Digital output (DO)	*2*
Digital input (DI)	*2*
Tariff input (TI)	*2*
Additional communication port (COM2)	*1*
Status output (WO)	*1 + 1xRO*
Communication port for analogue extender EX104	*1*

Table 5: ***List of available I/O modules***

Analogue input:

Three types of analogue inputs are suitable for acquisition of low voltage DC signals from different sensors. According to application requirements it is possible to choose current, voltage or resistance (temperature) analogue input. They all use the same output terminals.

MiQen software allows setting an appropriate calculation factor, exponent and required unit for representation of primary measured value (temperature, pressure, wind speed …)

DC current input:

Nominal input range	*–20 mA…0…20 mA (±20%)*
Input resistance	*20 Ω*
Accuracy	*0.5 % of range*
Temperature drift	*0.01% / °C*
Conversion resolution	*16 bit (sigma-delta)*
	internally referenced
Analogue input mode	*Single-ended*

DC voltage input:

Nominal input range	*–10 V…0…10 V (±20%)*
Input resistance	*100 kΩ*
Accuracy	*0.5 % of range*
Temperature drift	*0.01% / °C*
Conversion resolution	*16 bit (sigma-delta) internally referenced*
Analogue input mode	*Single-ended*

Resistance (temperature) input:

*Nominal input range (low)**	*0 Ω - 200 Ω (max. 400 Ω) PT100 (-200°C–850°C)*
*Nominal input range (high)**	*0 kΩ – 2 kΩ (max. 4 kΩ) PT1000 (-200°C–850°C)*
Connection	*2-wire*
Accuracy	*0.5 % of range*
Conversion resolution	*16 bit (sigma-delta) internally referenced*
Analogue input mode	*Single-ended*

**** Low or high input range and primary input value (resistance or temperature) are set by the MiQen setting software***

Analogue output:

Output range	*0 mA…20 mA*
Accuracy	*0.5% of range*
Max. burden	*150 Ω*
Linearization	*Linear, Quadratic*
No. of break points	*5*
Output value limits	*± 120% of nominal output*
Response time (measurement and analogue output)	*depends on set general average interval (0.1 s – 5 s)*
Residual ripple	*< 1 % p.p.*

Outputs may be either short or open-circuited. They are electrically insulated from each other and from all other circuits.

Output range values can be altered subsequently (zoom scale) using the setting software, but a supplementary error results.

Digital input:

Purpose	*Tariff input, Pulse input, General purpose digital input*

Tariff input

No. of inputs per module	*2*
Rated voltage	*5 V…48 $V_{AC/DC}$** *110 ± 20 % $V_{AC/DC}$** *230 ± 20 %$V_{AC/DC}$** **Depends on a build in hardware*
Frequency range	*45 Hz…65 Hz*

Pulse input

No. of inputs per module	*2*
Rated voltage	*5 V- 48 V_{DC} (±20 %)*
Max. current	*8 mA (at 48 V_{DC} + 20 %)*
Min. pulse width	*0.5 ms*
Min. pulse period	*2 ms*
SET voltage	*(40...120) % of rated voltage*
RESET voltage	*(0...10) % of rated voltage*

General purpose digital input

No. of inputs per module	*2*
Voltage	*5 V…48 $V_{AC/DC}$** *110 ± 20 % $V_{AC/DC}$** *230 ± 20 %$V_{AC/DC}$** **Depends on a build in hardware*

Digital output:

Type	*Relay switch*
No. of outputs per module	*2*
Purpose	*Alarm output, General purpose Digital output, Pulse output, Status output (watchdog)*
Rated voltage	*230 $V_{AC/DC}$ ± 20% max*
Max. switching current	*1000 mA*
Contact resistance	*≤ 100 mΩ (100 mA, 24 V)*
Impulse	*Max. 4000 imp/hour Min. length 100 ms*

Type	*Bistable Relay switch*
No. of outputs per module	*1*
Purpose	*Alarm output, General purpose digital output*
Max. switching current	*1000 mA*
Contact resistance	*≤ 100 mΩ (100 mA, 24 V)*

Type	*Optocoupler open collector switch*
No. of outputs per module	*2*
Purpose	*Pulse output*
Rated voltage	*40 $V_{AC/DC}$*
Max.switching	*30 mA (R_{ONmax} = 8 Ω)*
Pulse length	*programmable (2 ms… 999 ms)*

Type	*Relay switch*
No. of outputs	*1 x watchdog + 1 x relay output*
Normal operation	*Relay in ON position*
Failure detection delay	*≈ 1.5 s*
Rated voltage	*230 $V_{AC/DC}$ ±20 % max*
Max. switching current	*1000 mA*
Contact resistance	*≤ 100 mΩ (100 mA, 24 V)*

Power Supply

Standard:	*CAT III 300V*
Nominal voltage AC	*48 V… 276 V*
Nominal frequency	*40 Hz… 65 Hz*
Nominal voltage DC	*20 V… 300 V*
Consumption (max. all I/O)	*< 8 VA*
Power-on transient current	*< 20 A; 1 ms*
AC power supply	*CAT III 300 V*
Nominal voltage AC	*110 V, 230 V or 400 V*
Nominal frequency	*40 Hz… 65 Hz*
Consumption (max. all I/O)	*< 8 VA*

Safety

Safety:	*protection class **II***
⓪ ⑩	*functional earth terminal must be connected to earth potential!*
	Voltage inputs via high impedance
	Double insulation for I/O ports and COM ports
Pollution degree:	*2*
Test voltages:	*U_{AUX} against SELV circuits – 3.51 kV rms*
	Other circuits to functional earth – 2.21 kV rms
EMC:	*Directive on electromagnetic compatibility 2004/108/EC*
	In compliance with EN 61326-1:2013 for industrial enviroment
Protection:	*In compliance with EN 60592: 1997/A1:2000*
	Front side (with protection cover for memory slot: IP40
	Rear side (with protection cover): IP20

Mechanical

Dimensions	*96 mm × 96 mm × 96.5 mm*
Mounting	*Panel mounting*
	96 mm × 96 mm
Required mounting hole	*92 mm × 92 mm*
Enclosure material	*PC/ABS*
Flammability	*Acc. to UL 94 V-0*
Weight	*550 g*
Enclosure material	*PC/ABS*
	Acc. to UL 94 V-0

Ambient conditions

Ambient temperature	*K55 temperature class*
	Acc. to EN61557-12
	-10 °C …55 °C
Storage temperature	*-40 °C to +70 °C*
Ambient humidity	*≤ 75% r.h. (no condensation)*
Max. storage and transport humidity	*≤ 90% r.h. (no condensation)*
Voltage and Current max. temperature influence limit	*± 20 ppm / K*
	(10 V-600 V; 0.05 A-10 A)
	(T_{amb}: -30°C to +70°C)

Real time clock

A built-in real time clock is also without external synchronization very stable when device is connected to auxiliary power supply. For handling shorter power interruptions without influence on RTC, device uses high capacity capacitor battery. It ensures auxiliary supply (for internal RTC only) for more than two days of operation (6 years with battery).

To enable clock operation backup supercap or battery is built-in.

Supercap life span	*approx. 2 days*
Type	*Low power embedded RTC*
RTC stability	*< 1 sec / day*
Battery life span	*approx. 6 years (at 23 °C)*

Connection cables

MC 770 Power Quality Analyzer is equipped with European style pluggable terminals for measuring voltages, auxiliary supply, communication and I/O modules.

Measuring current cables can be connected in two ways. They shall be attached as through-hole connection without screwing or as detachable screw terminals.

NOTE: Stranded wire must be used with insulated end sleeve to assure firm connection.

Voltage inputs (4)	*≤2.5 mm^2 , AWG 24-12 single wire*
Current inputs (3)	*≤Ø 6 mm one conductor with insulation*
Supply (3)	*≤2.5 mm^2 , AWG 24-12 single wire*
Com (5), I/O (6)	*≤2.5 mm^2 , AWG 24-12 single wire*

MiQen - setting and acquisition Software

MiQen software is intended for supervision of ***MC 770*** and many other instruments on a PC. Network and the device setting, display of measured and stored values and analysis of stored data in the device are possible via the serial, Ethernet or USB communication. The information and stored measurements can be exported in standard Windows formats. Multilingual software functions on Windows XP operating system or higher.

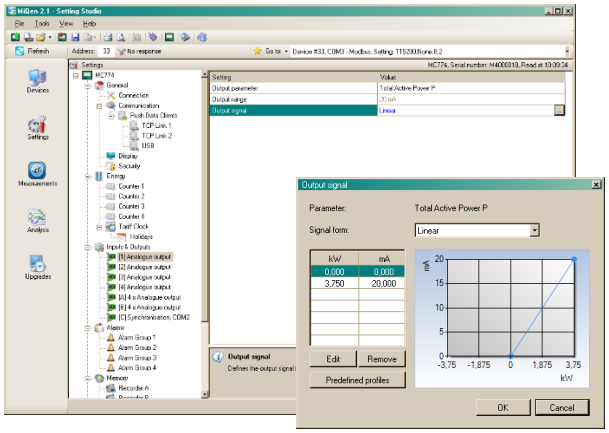

Figure 9 ***MiQen setting and acquisition software***

MiQen software is intended for:

- Setting all of the instruments parameters (online and offline).
- Viewing current measured readings and stored data.
- Setting and resetting energy counters.
- Complete I/O modules configuration.
- Evaluation of the electricity supply quality in compliance with SIST EN 50160.
- Viewing and exporting time-stamped PQ anomaly details.
- Upgrading instruments firmware.
- Searching the net for devices.
- Virtual interactive instrument.
- Comprehensive help support.

NOTE!

MiQen software functions depend on the type of connected device.

CONNECTION

Two possible connections of current are available, through-hole connection and terminal connection (see pictures below).

System/connection	***Through-hole connection assignment***	***Terminal connection assignment***
1b (1W1b) *Single-phase connection*	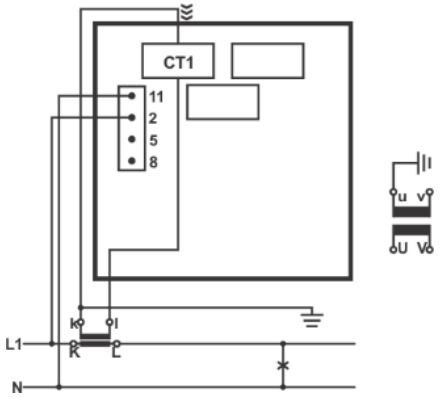	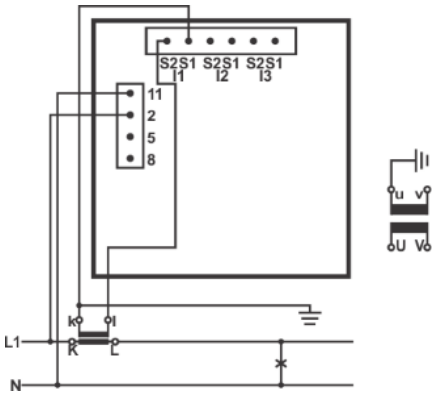
3b (1W3b) Three-phase, three-wire connection with balanced load	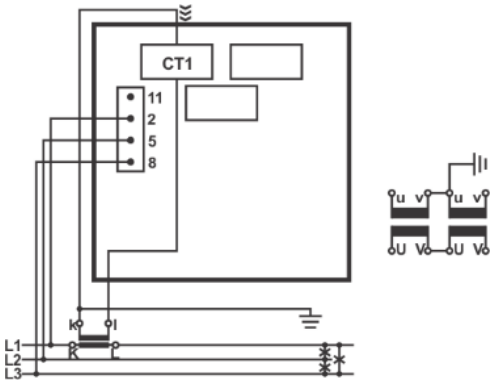	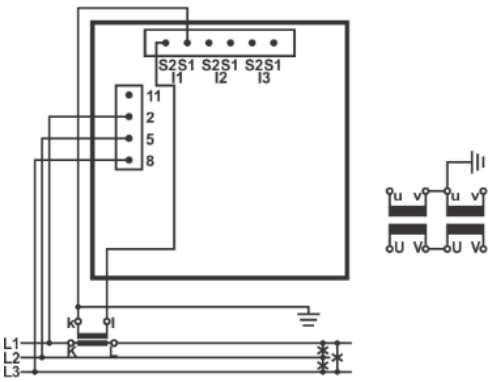
3u (2W3u) Three-phase, three-wire connection with unbalanced load.	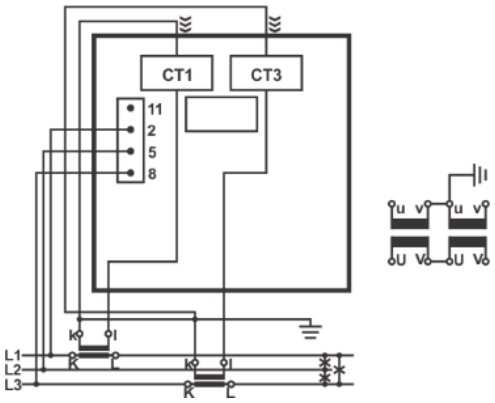	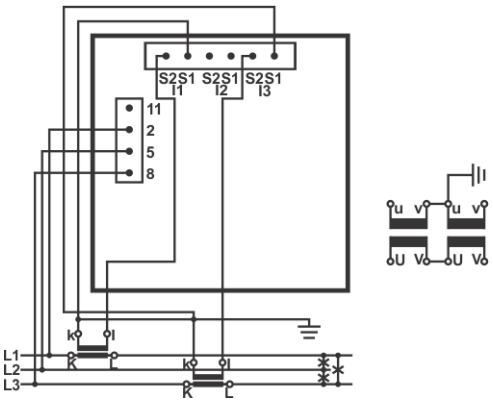

System/connection	Through-hole connection assignment	Terminal connection assignment
4b (1W4b) Three-phase, four wire connection with balanced load	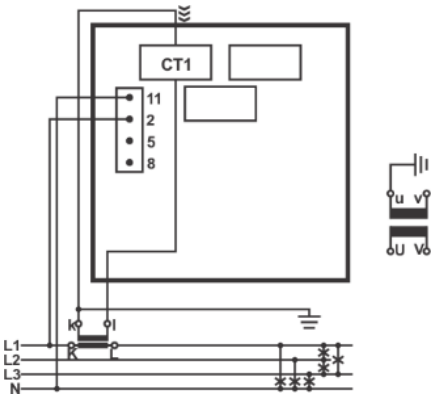	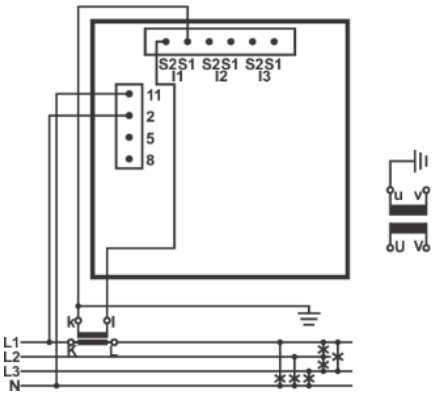
4u (3W4) Three-phase, four wire connection with unbalanced load.	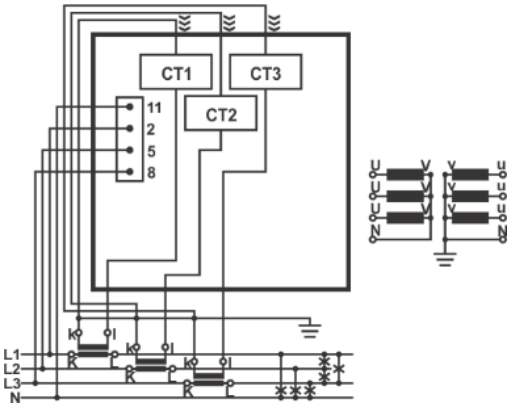	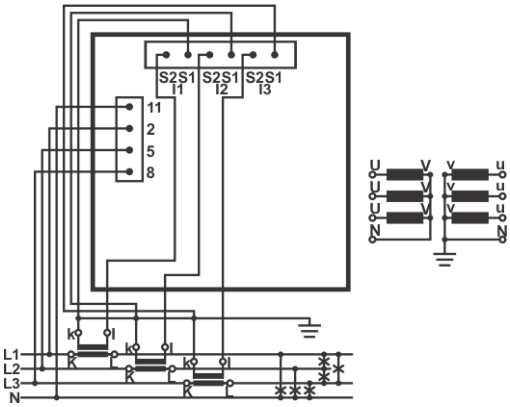

DIMENSIONAL DRAWING

Dimensions for MC 770 (through-hole connection assignment):

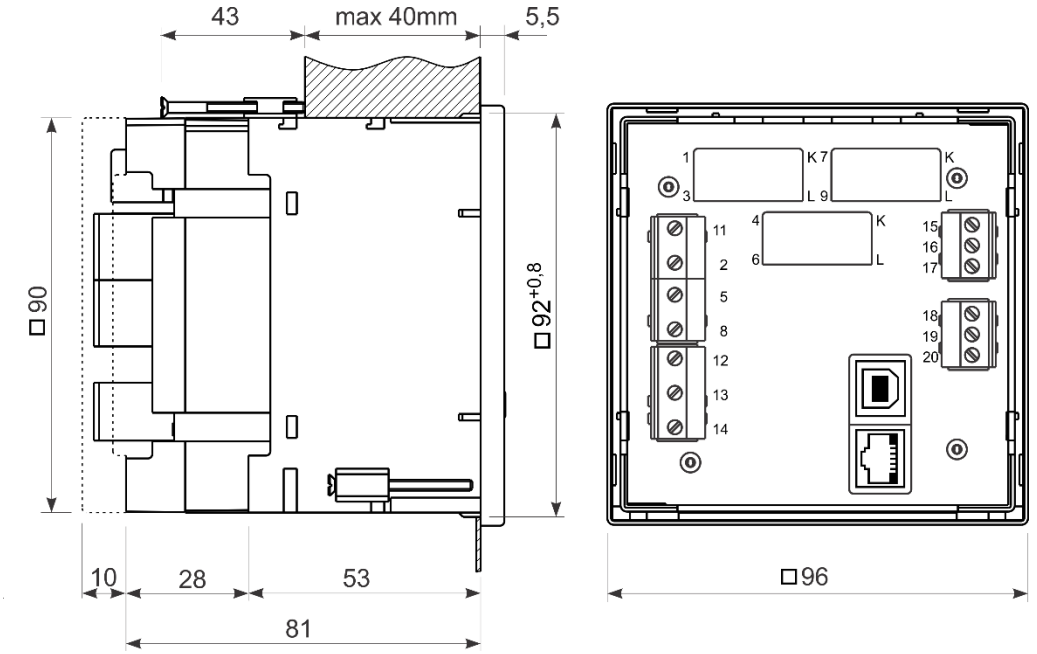

Dimensions for MC 770 (terminal connection assignment):

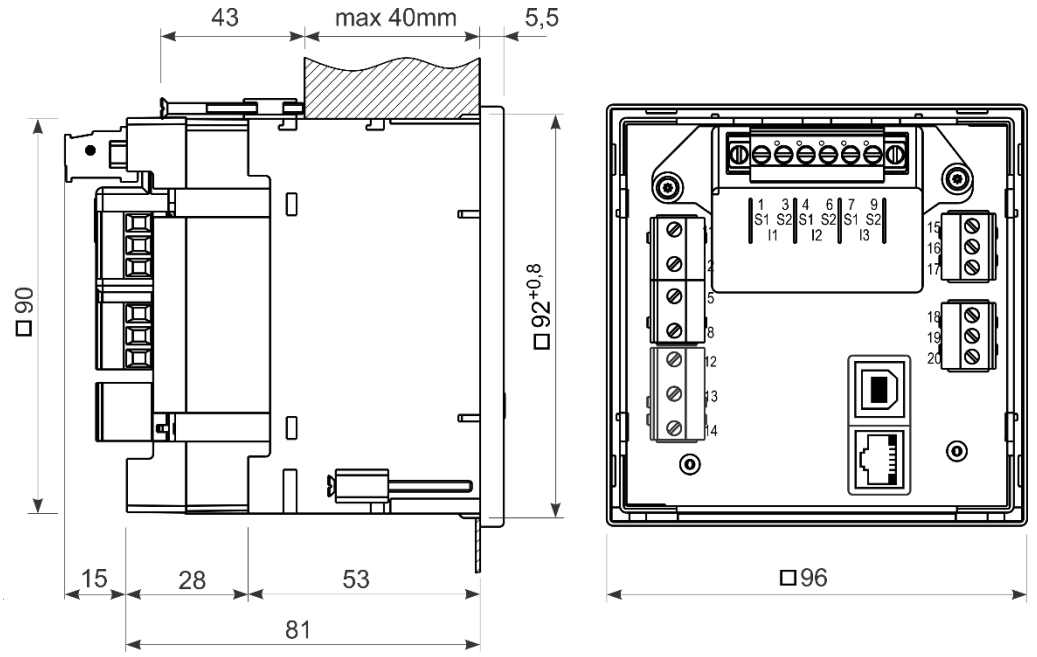

Connection table

Function			Connection	Comment
Measuring input:	AC current	IL1	1/3	⓪ CAT II 600V CAT III 300V
		IL2	4/6	
		IL3	7/9	
	AC voltage	UL1	2	⓪ CAT II 600V CAT III 300V
		UL2	5	
		UL3	8	
		UN	11	
Inputs/outputs:	Module 1/2	❷+	15	
		❷▤ (common)	16	
		❷+	17	
	Module 3/4	❷+	18	
		❷▤ (common)	19	
		❷+	20	
Auxiliary power supply:		+ / AC (L)	13	⓪ CAT III 300V GROUND terminal must be always connected !!
		– / AC (N)	14	
		GROUND	12	
Communication:	RS485	A	21	RS232 and RS485 are both supported, but only one at the time can be used! In case of Ethernet/USB communication, terminals from 21 to 25 are not used (unconnected).
		B	22	
	RS232	RX	23	
		GND	24	
		TX	25	
Communication: DB9 female	RS232	Rx	3	
		✓	5	
		Tx	2	
	RS485	B	7	
		A	8	

Table 6: ***Connections***

DATA FOR ORDERING

When ordering ***MC 770 Power Quality Analyzer***, all required specifications shall be stated in compliance with the ordering code. Additional information could be stated. Note that fixed or programmable specifications are not part of ordering code.

General ordering code

The following specifications shall be stated:

Device Type	Nominal freq.	Aux. power supply	Comm. COM1	I/O module 1/2	I/O module 3/4	RTC backup supply	Current connection		
MC 770	**X**	**X**	**X**	**X**	**X**	**X**	**X**		
	|	|	|	|	|	|	|		
	|	|	|	|	|	|	**T**	Through Hole Transformer *	
	|	|	|	|	|	|	**C**	Screw Terminal Connector	
	|	|	|	|	|	**C**	Supercap*		
	|	|	|	|	|	**B**	Battery		
	|	|	|	**N**		Without *			
	|	|	|	**A**		2× Analogue output		Not available for Nominal freq. 16 2/3 Hz
	|	|	|	**S**		2× Pulse output		
	|	|	|	**M**		2× Relay (alarm) output		
	|	|	|	**B**		1× Bistable relay (alarm) output		
	|	|	|	**W**		1× Status (Watchdog) + 1× Relay output		
	|	|	|	**I**		2× Analogue input - mA $_{DC}$		
	|	|	|	**U**		2× Analogue input - V $_{DC}$		
	|	|	|	**R**		2× Analogue input - R/Temp.		
	|	|	|	**P**		2× Pulse input 5 - 48 V $_{DC}$		
	|	|	|	**D**		2× Digital input 230 V $_{AC/DC}$		
	|	|	|	**E**		2× Digital input 110 V $_{AC/DC}$		
	|	|	|	**F**		2× Digital input 5 - 48 V $_{AC/DC}$		
	|	|	|	**T**		2× Tariff input 230 V $_{AC/DC}$		I/O module 1/2 only
	|	|	|	**Z**		2× Tariff input 110 V $_{AC/DC}$		I/O module 1/2 only
	|	|	|	**Y**		2× Tariff input 5 - 48 V $_{AC/DC}$		I/O module 1/2 only
	|	|	|	**G**		RS232 Communication - COM2		I/O module 3/4 only
	|	|	|	**C**		RS485 Communication - COM2		I/O module 3/4 only
	|	|	|	**X**		Output Extender - COM2		I/O module 3/4 only
	|	|	**T**	RS232/RS485 Terminal *				
	|	|	**R**	RS232/RS485 DB9				
	|	|	**E**	Ethernet & USB				
	|	**U**	20 ... 300 V $_{DC}$, 48 ... 276 V $_{AC}$ *					
	|	**D**	110 V $_{AC}$					
	|	**E**	230 V $_{AC}$					
	|	**F**	400 V $_{AC}$					
	S	50, 60 Hz *						
	A	400 Hz						
	B	16 2/3 Hz						

***- standard**

Example of ordering:

MC 770 with a universal supply is connected to 230 V voltage and 5 A secondary current on 50 Hz network. Ethernet & USB communication, watchdog output (plus one relay output) as I/O 1/2 and two pulse outputs as I/O 3/4. RTC with supercap supply. Through-hole type current transformers.

Voltage and current nominal value are due to auto-range fixed to max. nominal value and are therefore omitted from ordering code.

Connection type is user programmable and is therefore omitted from ordering code. Default is 4u connection.

Example ordering code:

MC 770 S U E W S C T

| | | | | | | |

| | | | | | | Through Hole Transformer

| | | | | | Supercap

| | | | | 2× Pulse output

| | | | 1× Status (Watchdog) + 1× Relay output

| | | Ethernet & USB

| | Universal (20 V DC... 300 V DC, 48 V AC... 276 V AC)

50 Hz, 60 Hz

DICTIONARY:

PQ	*Power Quality alias Voltage Quality*
RMS	*Root Mean Square*
PA	*Power angle (between current and voltage)*
PF	*Power factor*
VT	*Voltage measuring transformer*
CT	*Current measuring transformer*
THD	*Total harmonic distortion*
Ethernet	*IEEE 802.3 data layer protocol*
MODBUS	*Industrial protocol for data transmission*
MiQen	*ISKRA setting and acquisition Software*
AC	*Alternating quantity*
RTC	*Real Time Clock*
IRIG	*Inter-range instrumentation group time codes*
NTP	*Network Time Protocol*

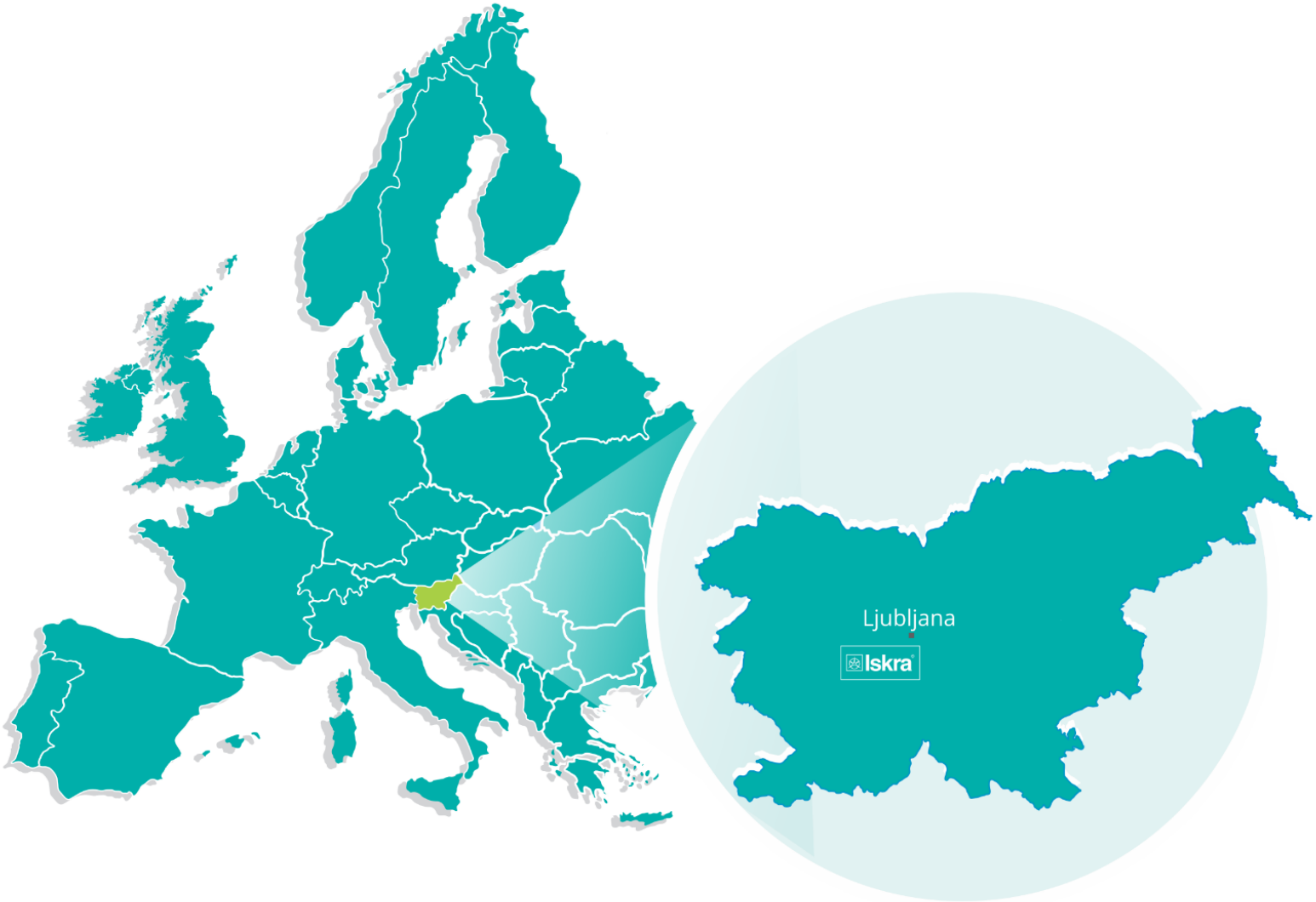

Iskra, d.o.o.
BU Ljubljana
Stegne 21
SI-1000 , Ljubljana
Phone: + 386 1 513 10 00

Iskra, d.o.o.
BU Capacitors
Vajdova ulica 71
SI-8333 , Semič
Phone: +386 7 38 49 200

Iskra, d.o.o.
BU MIS
Ljubljanska c. 24a
SI-4000 , Kranj
Phone: +386 4 237 21 12

Iskra, d.o.o.
BU Batteries & Potentiometers
Šentvid pri Stični 108
SI-1296 , Šentvid pri Stični
Phone: +386 1 780 08 00

Iskra, d.o.o.
BU Electroplating
Glinek 5
SI-1291 , Škofljica
Phone: +386 1 366 80 50

Iskra IP, d.o.o.
Vajdova ulica 71
SI-8333 , Semič
Phone: +386 7 384 94 54

Iskra STIK, d.o.o.
Ljubljanska cesta 24a
SI-4000 , Kranj
Phone: +386 4 237 22 33

Iskra Lotrič, d.o.o.
Otoče 5a
SI-4244 , Podnart
Phone: +386 4 535 91 68

Iskra ODM, d.o.o.
Otoče 5a
4244 , Podnart
Phone: +386 1 513 10 00

Iskra Tela L, d.o.o.
Omladinska 66
78250 , Laktaši
Phone: +387 51 535 890

Iskra Sistemi - M dooel
Ul, Dame Gruev br. 16/5 kat
1000 , Skopje
Phone: +389 75 444 498

Iskra Commerce, d.o.o.
Hadži Nikole Živkoviča br. 2
11000 , Beograd
Phone: +381 11 328 10 41

Iskra Hong Kong Ltd.
33 Canton Road, T.S.T.
1705 , China HK City
Phone: +852 273 00 917

Iskra®

Iskra, d.o.o.
Stegne 21
SI-1000 Ljubljana, Slovenia

Phone: +386 (0) 1 513 10 00
www.iskra.eu

EN

Published by Iskra, d.o.o. • Subject to change without notice • Version 1.07 June 2020 • EN P22.440.500