RI70 10 kA

Miniature Circuit Breakers

Types

RI71	single pole
RI72	two pole
RI73	three pole
RI74	four pole
RI71N	single pole + neutral pole
RI73N	three pole + neutral pole

Benefits

- Protection against both overload and short circuit, function of isolation
- High Breaking Capacity [I_{cn}]: 10 kA
- High Rated Service Breaking Capacity [I_{cs}]: 7.5 kA
- Contact position indicator
- 35 mm FIN rail mounting and screw mounting
- Full range accessories are available

Technical data	Symbol	Unit	RI70
Standards			IEC/EN 60898-1
Rated current	I_n	A	0.5, 1, 2, 3, 4, 6, 8, 10, 13, 16, 20, 25, 32, 40, 50, 63
Rated voltage	U_n	V	AC 230/240, AC 400/415
Breaking capacity	I_{cn}	kA	10
Service breaking capacity	I_{cs}	kA	7.5
Rated frequency	f_n	Hz	50/60
Tripping characteristics			B, C, D
Number of poles			1P, 2P, 3P, 4P, 1P+N, 3P+N
Rated impulse withstand voltage	U_{imp}	kV	4
Electrical endurance			10000 cycles
Mechanical endurance			20000 cycles
Terminal			pillar type
Cable termination		mm²	25
Torque of screw		Nm	2.5
Ambient temperature		°C	-25 ... +55
Storage temperature		°C	-40 ... +70
IP degree			IP20

RI70 — C characteristics

Type	Rated Current I_n (A)	Rated Voltage U_n (V)	No. of Poles	Ordering No.	Weight (g)	Quantity / Box	Quantity / CTN
RI71							
RI71 C0.5	0.5	230/240	1	786.091.483	100	12	120
RI71 C1	1	230/240	1	786.091.182	105	12	120
RI71 C2	2	230/240	1	786.091.183	102	12	120
RI71 C3	3	230/240	1	786.091.184	104	12	120
RI71 C4	4	230/240	1	786.091.185	104	12	120
RI71 C6	6	230/240	1	786.091.186	104	12	120
RI71 C8	8	230/240	1	786.091.187	105	12	120
RI71 C10	10	230/240	1	786.091.188	105	12	120
RI71 C13	13	230/240	1	786.091.189	104	12	120
RI71 C16	16	230/240	1	786.091.190	104	12	120
RI71 C20	20	230/240	1	786.091.191	105	12	120
RI71 C25	25	230/240	1	786.091.192	105	12	120
RI71 C32	32	230/240	1	786.091.193	105	12	120
RI71 C40	40	230/240	1	786.091.194	110	12	120
RI71 C50	50	230/240	1	786.091.195	117	12	120
RI71 C63	63	230/240	1	786.091.196	123	12	120
RI72							
RI72 C0.5	0.5	415	2	786.091.492	200	6	60
RI72 C1	1	415	2	786.091.197	210	6	60
RI72 C2	2	415	2	786.091.198	220	6	60
RI72 C3	3	415	2	786.091199	220	6	60
RI72 C4	4	415	2	786.091.200	220	6	60
RI72 C6	6	415	2	786.091.201	225	6	60
RI72 C8	8	415	2	786.091.202	226	6	60
RI72 C10	10	415	2	786.091.203	226	6	60
RI72 C13	13	415	2	786.091.204	226	6	60
RI72 C16	16	415	2	786.091.205	225	6	60
RI72 C20	20	415	2	786.091.206	226	6	60
RI72 C25	25	415	2	786.091.207	226	6	60
RI72 C32	32	415	2	786.091.208	226	6	60
RI72 C40	40	415	2	786.091.209	235	6	60
RI72 C50	50	415	2	786.091.210	235	6	60
RI72 C63	63	415	2	786.091.211	246	6	60
RI73							
RI73 C0.5	0.5	415	3	786.091.493	300	4	40
RI73 C1	1	415	3	786.091.212	315	4	40
RI73 C2	2	415	3	786.091.213	306	4	40
RI73 C3	3	415	3	786.091.214	312	4	40
RI73 C4	4	415	3	786.091.215	312	4	40
RI73 C6	6	415	3	786.091.216	312	4	40
RI73 C8	8	415	3	786.091.187	312	4	40
RI73 C10	10	415	3	786.091.218	312	4	40
RI73 C13	13	415	3	786.091.189	312	4	40
RI73 C16	16	415	3	786.091.220	312	4	40
RI73 C20	20	415	3	786.091.221	315	4	40
RI73 C25	25	415	3	786.091.222	315	4	40
RI73 C32	32	415	3	786.091.223	315	4	40
RI73 C40	40	415	3	786.091.224	330	4	40
RI73 C50	50	415	3	786.091.225	351	4	40
RI73 C63	63	415	3	786.091.226	367	4	40

RI70 — C characteristics

Type	Rated Current I_n (A)	Rated Voltage U_n (V)	No. of Poles	Ordering No.	Weight (g)	Quantity / Box	Quantity / CTN
RI74							
RI74 C0.5	0.5	415	4	786.091.494	400	3	30
RI74 C1	1	415	4	786.091.227	420	3	30
RI74 C2	2	415	4	786.091.228	424	3	30
RI74 C3	3	415	4	786.091.229	432	3	30
RI74 C4	4	415	4	786.091.230	432	3	30
RI74 C6	6	415	4	786.091.231	432	3	30
RI74 C8	8	415	4	786.091.232	432	3	30
RI74 C10	10	415	4	786.091.233	432	3	30
RI74 C13	13	415	4	786.091.234	432	3	30
RI74 C16	16	415	4	786.091.235	448	3	30
RI74 C20	20	415	4	786.091.236	448	3	30
RI74 C25	25	415	4	786.091.237	448	3	30
RI74 C32	32	415	4	786.091.238	447	3	30
RI74 C40	40	415	4	786.091.239	448	3	30
RI74 C50	50	415	4	786.091.240	468	3	30
RI74 C63	63	415	4	786.091.241	489	3	30
RI71N							
RI71N C0.5	0.5	230/240	1+N	786.091.500	199	6	60
RI71N C1	1	230/240	1+N	786.091.242	204	6	60
RI71N C2	2	230/240	1+N	786.091.243	201	6	60
RI71N C3	3	230/240	1+N	786.091.244	203	6	60
RI71N C4	4	230/240	1+N	786.091.245	203	6	60
RI71N C6	6	230/240	1+N	786.091.246	203	6	60
RI71N C8	8	230/240	1+N	786.091.247	204	6	60
RI71N C10	10	230/240	1+N	786.091.248	204	6	60
RI71N C13	13	230/240	1+N	786.091.249	203	6	60
RI71N C16	16	230/240	1+N	786.091.250	203	6	60
RI71N C20	20	230/240	1+N	786.091.251	204	6	60
RI71N C25	25	230/240	1+N	786.091.252	204	6	60
RI71N C32	32	230/240	1+N	786.091.253	204	6	60
RI71N C40	40	230/240	1+N	786.091.254	209	6	60
RI71N C50	50	230/240	1+N	786.091.255	216	6	60
RI71N C63	63	230/240	1+N	786.091.256	222	6	60
RI73N							
RI73N C0.5	0.5	415	3+N	786.091.502	400	3	30
RI73N C1	1	415	3+N	786.091.257	414	3	30
RI73N C2	2	415	3+N	786.091.258	405	3	30
RI73N C3	3	415	3+N	786.091.259	411	3	30
RI73N C4	4	415	3+N	786.091.260	411	3	30
RI73N C6	6	415	3+N	786.091.261	411	3	30
RI73N C8	8	415	3+N	786.091.262	411	3	30
RI73N C10	10	415	3+N	786.091.263	411	3	30
RI73N C13	13	415	3+N	786.091.264	411	3	30
RI73N C16	16	415	3+N	786.091.265	411	3	30
RI73N C20	20	415	3+N	786.091.266	414	3	30
RI73N C25	25	415	3+N	786.091.267	414	3	30
RI73N C32	32	415	3+N	786.091.268	414	3	30
RI73N C40	40	415	3+N	786.091.269	429	3	30
RI73N C50	50	415	3+N	786.091.270	466	3	30
RI73N C63	63	415	3+N	786.091.271	466	3	30

RI70 — B characteristics

Type	Rated Current I_n (A)	Rated Voltage U_n (V)	No. of Poles	Ordering No.	Weight (g)	Quantity / Box	Quantity / CTN
RI71							
RI71 B0.5	0.5	230/240	1	786.091.495	100	12	120
RI71 B1	1	230/240	1	786.091.272	105	12	120
RI71 B2	2	230/240	1	786.091.273	102	12	120
RI71 B3	3	230/240	1	786.091.274	104	12	120
RI71 B4	4	230/240	1	786.091.275	104	12	120
RI71 B6	6	230/240	1	786.091.276	104	12	120
RI71 B8	8	230/240	1	786.091.277	105	12	120
RI71 B10	10	230/240	1	786.091.278	105	12	120
RI71 B13	13	230/240	1	786.091.279	104	12	120
RI71 B16	16	230/240	1	786.091.280	104	12	120
RI71 B20	20	230/240	1	786.091.281	105	12	120
RI71 B25	25	230/240	1	786.091.282	105	12	120
RI71 B32	32	230/240	1	786.091.283	105	12	120
RI71 B40	40	230/240	1	786.091.284	110	12	120
RI71 B50	50	230/240	1	786.091.285	117	12	120
RI71 B63	63	230/240	1	786.091.286	123	12	120
RI72							
RI72 B0.5	0.5	415	2	786.091.484	200	6	60
RI72 B1	1	415	2	786.091.287	210	6	60
RI72 B2	2	415	2	786.091.288	220	6	60
RI72 B3	3	415	2	786.091.289	220	6	60
RI72 B4	4	415	2	786.091.290	220	6	60
RI72 B6	6	415	2	786.091.291	225	6	60
RI72 B8	8	415	2	786.091.292	226	6	60
RI72 B10	10	415	2	786.091.293	226	6	60
RI72 B13	13	415	2	786.091.294	226	6	60
RI72 B16	16	415	2	786.091.295	225	6	60
RI72 B20	20	415	2	786.091.296	226	6	60
RI72 B25	25	415	2	786.091.297	226	6	60
RI72 B32	32	415	2	786.091.298	226	6	60
RI72 B40	40	415	2	786.091.299	235	6	60
RI72 B50	50	415	2	786.091.300	235	6	60
RI72 B63	63	415	2	786.091.301	246	6	60
RI73							
RI73 B0.5	0.5	415	2	786.091.496	300	4	40
RI73 B1	1	415	3	786.091.302	315	4	40
RI73 B2	2	415	3	786.091.303	306	4	40
RI73 B3	3	415	3	786.091.304	312	4	40
RI73 B4	4	415	3	786.091.305	312	4	40
RI73 B6	6	415	3	786.091.306	312	4	40
RI73 B8	8	415	3	786.091.307	312	4	40
RI73 B10	10	415	3	786.091.308	312	4	40
RI73 B13	13	415	3	786.091.309	312	4	40
RI73 B16	16	415	3	786.091.310	312	4	40
RI73 B20	20	415	3	786.091.311	315	4	40
RI73 B25	25	415	3	786.091.312	315	4	40
RI73 B32	32	415	3	786.091.313	315	4	40
RI73 B40	40	415	3	786.091.314	330	4	40
RI73 B50	50	415	3	786.091.315	351	4	40
RI73 B63	63	415	3	786.091.316	367	4	40

RI70 — B characteristics

Type	Rated Current I_n (A)	Rated Voltage U_n (V)	No. of Poles	Ordering No.	Weight (g)	Quantity / Box	Quantity / CTN
RI74							
RI74 B0.5	0.5	415	4	786.091.497	400	3	30
RI74 B1	1	415	4	786.091.317	420	3	30
RI74 B2	2	415	4	786.091.318	424	3	30
RI74 B3	3	415	4	786.091.319	432	3	30
RI74 B4	4	415	4	786.091.320	432	3	30
RI74 B6	6	415	4	786.091.321	432	3	30
RI74 B8	8	415	4	786.091.322	432	3	30
RI74 B10	10	415	4	786.091.323	432	3	30
RI74 B13	13	415	4	786.091.324	432	3	30
RI74 B16	16	415	4	786.091.325	448	3	30
RI74 B20	20	415	4	786.091.326	448	3	30
RI74 B25	25	415	4	786.091.327	448	3	30
RI74 B32	32	415	4	786.091.328	447	3	30
RI74 B40	40	415	4	786.091.329	448	3	30
RI74 B50	50	415	4	786.091.330	468	3	30
RI74 B63	63	415	4	786.091.331	489	3	30
RI71N							
RI71N B0.5	0.5	230/240	1+N	786.091.501	199	6	60
RI71N B1	1	230/240	1+N	786.091.332	204	6	60
RI71N B2	2	230/240	1+N	786.091.333	201	6	60
RI71N B3	3	230/240	1+N	786.091.334	203	6	60
RI71N B4	4	230/240	1+N	786.091.335	203	6	60
RI71N B6	6	230/240	1+N	786.091.336	203	6	60
RI71N B8	8	230/240	1+N	786.091.337	204	6	60
RI71N B10	10	230/240	1+N	786.091.338	204	6	60
RI71N B13	13	230/240	1+N	786.091.339	203	6	60
RI71N B16	16	230/240	1+N	786.091.340	203	6	60
RI71N B20	20	230/240	1+N	786.091.341	204	6	60
RI71N B25	25	230/240	1+N	786.091.342	204	6	60
RI71N B32	32	230/240	1+N	786.091.343	204	6	60
RI71N B40	40	230/240	1+N	786.091.344	209	6	60
RI71N B50	50	230/240	1+N	786.091.345	216	6	60
RI71N B63	63	230/240	1+N	786.091.346	222	6	60
RI73N							
RI73N B0.5	0.5	415	3+N	786.091.503	400	3	30
RI73N B1	1	415	3+N	786.091.347	414	3	30
RI73N B2	2	415	3+N	786.091.348	405	3	30
RI73N B3	3	415	3+N	786.091.349	411	3	30
RI73N B4	4	415	3+N	786.091.350	411	3	30
RI73N B6	6	415	3+N	786.091.351	411	3	30
RI73N B8	8	415	3+N	786.091.352	411	3	30
RI73N B10	10	415	3+N	786.091.353	411	3	30
RI73N B13	13	415	3+N	786.091.354	411	3	30
RI73N B16	16	415	3+N	786.091.355	411	3	30
RI73N B20	20	415	3+N	786.091.356	414	3	30
RI73N B25	25	415	3+N	786.091.357	414	3	30
RI73N B32	32	415	3+N	786.091.358	414	3	30
RI73N B40	40	415	3+N	786.091.359	429	3	30
RI73N B50	50	415	3+N	786.091.360	466	3	30
RI73N B63	63	415	3+N	786.091.361	466	3	30

RI70 — D characteristics

Type	Rated Current I_n (A)	Rated Voltage U_n (V)	No. of Poles	Ordering No.	Weight (g)	Quantity / Box	Quantity / CTN
RI71							
RI71 D0.5	0.5	230/240	1	786.091.482	100	12	120
RI71 D1	1	230/240	1	786.091.362	105	12	120
RI71 D2	2	230/240	1	786.091.363	102	12	120
RI71 D3	3	230/240	1	786.091.364	104	12	120
RI71 D4	4	230/240	1	786.091.365	104	12	120
RI71 D6	6	230/240	1	786.091.366	104	12	120
RI71 D8	8	230/240	1	786.091.367	105	12	120
RI71 D10	10	230/240	1	786.091.368	105	12	120
RI71 D13	13	230/240	1	786.091.369	104	12	120
RI71 D16	16	230/240	1	786.091.370	104	12	120
RI71 D20	20	230/240	1	786.091.371	105	12	120
RI71 D25	25	230/240	1	786.091.372	105	12	120
RI71 D32	32	230/240	1	786.091.373	105	12	120
RI71 D40	40	230/240	1	786.091.374	110	12	120
RI71 D50	50	230/240	1	786.091.375	117	12	120
RI71 D63	63	230/240	1	786.091.376	123	12	120
RI72							
RI72 D0.5	0.5	415	2	786.091.484	200	6	60
RI72 D1	1	415	2	786.091.377	210	6	60
RI72 D2	2	415	2	786.091.378	220	6	60
RI72 D3	3	415	2	786.091.379	220	6	60
RI72 D4	4	415	2	786.091.380	220	6	60
RI72 D6	6	415	2	786.091.381	225	6	60
RI72 D8	8	415	2	786.091.382	226	6	60
RI72 D10	10	415	2	786.091.383	226	6	60
RI72 D13	13	415	2	786.091.384	226	6	60
RI72 D16	16	415	2	786.091.385	225	6	60
RI72 D20	20	415	2	786.091.386	226	6	60
RI72 D25	25	415	2	786.091.387	226	6	60
RI72 D32	32	415	2	786.091.388	226	6	60
RI72 D40	40	415	2	786.091.389	235	6	60
RI72 D50	50	415	2	786.091.390	235	6	60
RI72 D63	63	415	2	786.091.391	246	6	60
RI73							
RI73 D0.5	0.5	415	3	786.091.498	300	4	40
RI73 D1	1	415	3	786.091.392	315	4	40
RI73 D2	2	415	3	786.091.393	306	4	40
RI73 D3	3	415	3	786.091.394	312	4	40
RI73 D4	4	415	3	786.091.395	312	4	40
RI73 D6	6	415	3	786.091.396	312	4	40
RI73 D8	8	415	3	786.091.397	312	4	40
RI73 D10	10	415	3	786.091.398	312	4	40
RI73 D13	13	415	3	786.091.399	312	4	40
RI73 D16	16	415	3	786.091.400	312	4	40
RI73 D20	20	415	3	786.091.401	315	4	40
RI73 D25	25	415	3	786.091.402	315	4	40
RI73 D32	32	415	3	786.091.403	315	4	40
RI73 D40	40	415	3	786.091.404	330	4	40
RI73 D50	50	415	3	786.091.405	351	4	40
RI73 D63	63	415	3	786.091.406	367	4	40

RI70 — D characteristics

Type	Rated Current I_n (A)	Rated Voltage U_n (V)	No. of Poles	Ordering No.	Weight (g)	Quantity / Box	Quantity / CTN
RI74							
RI74 D0.5	0.5	415	4	786.091.499	400	3	30
RI74 D1	1	415	4	786.091.407	420	3	30
RI74 D2	2	415	4	786.091.408	424	3	30
RI74 D3	3	415	4	786.091.409	432	3	30
RI74 D4	4	415	4	786.091.410	432	3	30
RI74 D6	6	415	4	786.091.411	432	3	30
RI74 D8	8	415	4	786.091.412	432	3	30
RI74 D10	10	415	4	786.091.413	432	3	30
RI74 D13	13	415	4	786.091.414	432	3	30
RI74 D16	16	415	4	786.091.415	448	3	30
RI74 D20	20	415	4	786.091.416	448	3	30
RI74 D25	25	415	4	786.091.417	448	3	30
RI74 D32	32	415	4	786.091.418	447	3	30
RI74 D40	40	415	4	786.091.419	448	3	30
RI74 D50	50	415	4	786.091.420	468	3	30
RI74 D63	63	415	4	786.091.421	489	3	30

Dimensions

(mm)

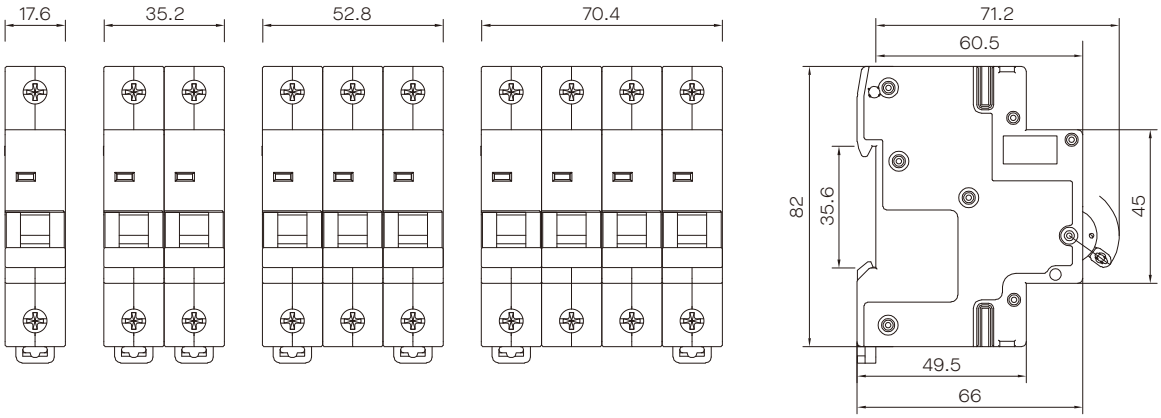

Wiring diagram

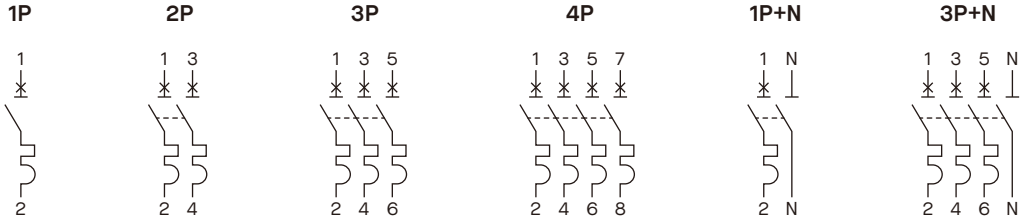

RI70J 10 kA DC

Miniature Circuit Breakers

Types

RI71J	single pole
RI72J	two pole
RI73J	three pole
RI74J	four pole

Benefits

- Used as DC protection for switchboards in PV systems
- Supports maximum system voltage up to 1200 VDC
- Short circuit, overload and surge protection

Technical data	Symbol	Unit	RI70J			
Standards			IEC/EN 60947-2			
Rated current	I_n	A	1, 2, 3, 4, 6, 10, 16, 20, 25, 32, 40, 50, 63			
Number of poles			**1P**	**2P**	**3P**	**4P**
Voltage	U_i	V	220/250	440/500	660/750	880/1000
Rated short-time making capacity (Icm) – 6 kA		VDC	500	600	1500	1500
Rated short-time making capacity (Icm) – 10 kA		VDC	300	600	1200	1200
Tripping characteristics			C			
Tripping type			thermal magnetic			
Rated impulse withstand voltage	U_{imp}	kV	6			
Electrical endurance			3000 cycles			
Mechanical endurance			10000 cycles			
Ambient temperature		°C	-25 ... +55			
Storage temperature		°C	-40 ... +70			
IP degree			IP20			

RI70J — C characteristics

Type	Rated Current I_n (A)	Voltage U_i (V)	Number of Poles	Ordering No.	Weight (g)	Quantity / Box	Quantity / CTN
RI71J							
RI71J C1	1	220/250	1	786.091.422	121	12	120
RI71J C2	2	220/250	1	786.091.423	121	12	120
RI71J C3	3	220/250	1	786.091.424	121	12	120
RI71J C4	4	220/250	1	786.091.425	121	12	120
RI71J C6	6	220/250	1	786.091.426	118	12	120
RI71J C10	10	220/250	1	786.091.428	118	12	120
RI71J C16	16	220/250	1	786.091.430	118	12	120
RI71J C20	20	220/250	1	786.091.431	118	12	120
RI71J C25	25	220/250	1	786.091.432	118	12	120
RI71J C32	32	220/250	1	786.091.433	118	12	120
RI71J C40	40	220/250	1	786.091.434	118	12	120
RI71J C50	50	220/250	1	786.091.435	121	12	120
RI71J C63	63	220/250	1	786.091.436	121	12	120
RI72J							
RI72J C1	1	440/500	2	786.091.437	242	6	60
RI72J C2	2	440/500	2	786.091.438	242	6	60
RI72J C3	3	440/500	2	786.091.439	242	6	60
RI72J C4	4	440/500	2	786.091.440	242	6	60
RI72J C6	6	440/500	2	786.091.441	236	6	60
RI72J C10	10	440/500	2	786.091.443	236	6	60
RI72J C16	16	440/500	2	786.091.445	236	6	60
RI72J C20	20	440/500	2	786.091.446	236	6	60
RI72J C25	25	440/500	2	786.091.447	236	6	60
RI72J C32	32	440/500	2	786.091.448	236	6	60
RI72J C40	40	440/500	2	786.091.449	236	6	60
RI72J C50	50	440/500	2	786.091.450	242	6	60
RI72J C63	63	440/500	2	786.091.451	242	6	60
RI73J							
RI73J C1	1	660/750	3	786.091.452	362	4	40
RI73J C2	2	660/750	3	786.091.453	362	4	40
RI73J C3	3	660/750	3	786.091.454	362	4	40
RI73J C4	4	660/750	3	786.091.455	362	4	40
RI73J C6	6	660/750	3	786.091.456	354	4	40
RI73J C10	10	660/750	3	786.091.458	354	4	40
RI73J C16	16	660/750	3	786.091.460	354	4	40
RI73J C20	20	660/750	3	786.091.461	354	4	40
RI73J C25	25	660/750	3	786.091.462	354	4	40
RI73J C32	32	660/750	3	786.091.463	354	4	40
RI73J C40	40	660/750	3	786.091.464	354	4	40
RI73J C50	50	660/750	3	786.091.465	484	4	40
RI73J C63	63	660/750	3	786.091.466	484	4	40

RI70J — C characteristics

Type	Rated Current I_n (A)	Voltage U_i (V)	Number of Poles	Ordering No.	Weight (g)	Quantity / Box	Quantity / CTN
RI74J							
RI74J C1	1	880/1000	4	786.091.467	482	3	30
RI74J C2	2	880/1000	4	786.091.468	482	3	30
RI74J C3	3	880/1000	4	786.091.469	482	3	30
RI74J C4	4	880/1000	4	786.091.470	482	3	30
RI74J C6	6	880/1000	4	786.091.471	468	3	30
RI74J C10	10	880/1000	4	786.091.473	468	3	30
RI74J C16	16	880/1000	4	786.091.475	468	3	30
RI74J C20	20	880/1000	4	786.091.476	468	3	30
RI74J C25	25	880/1000	4	786.091.477	468	3	30
RI74J C32	32	880/1000	4	786.091.478	468	3	30
RI74J C40	40	880/1000	4	786.091.479	468	3	30
RI74J C50	50	880/1000	4	786.091.480	482	3	30
RI74J C63	63	880/1000	4	786.091.481	482	3	30

Dimensions

(mm)

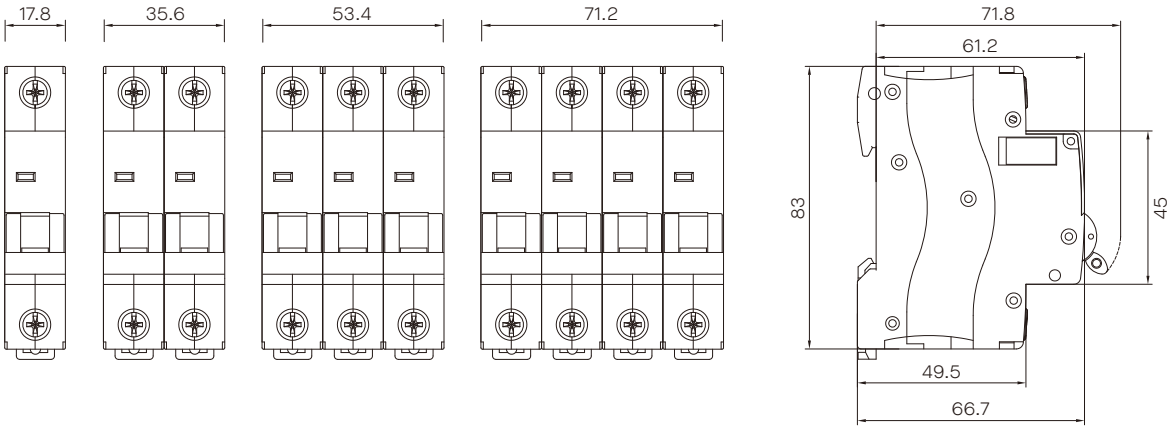

Wiring diagram

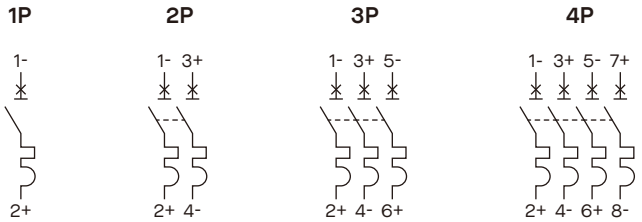

Accessories for RI70

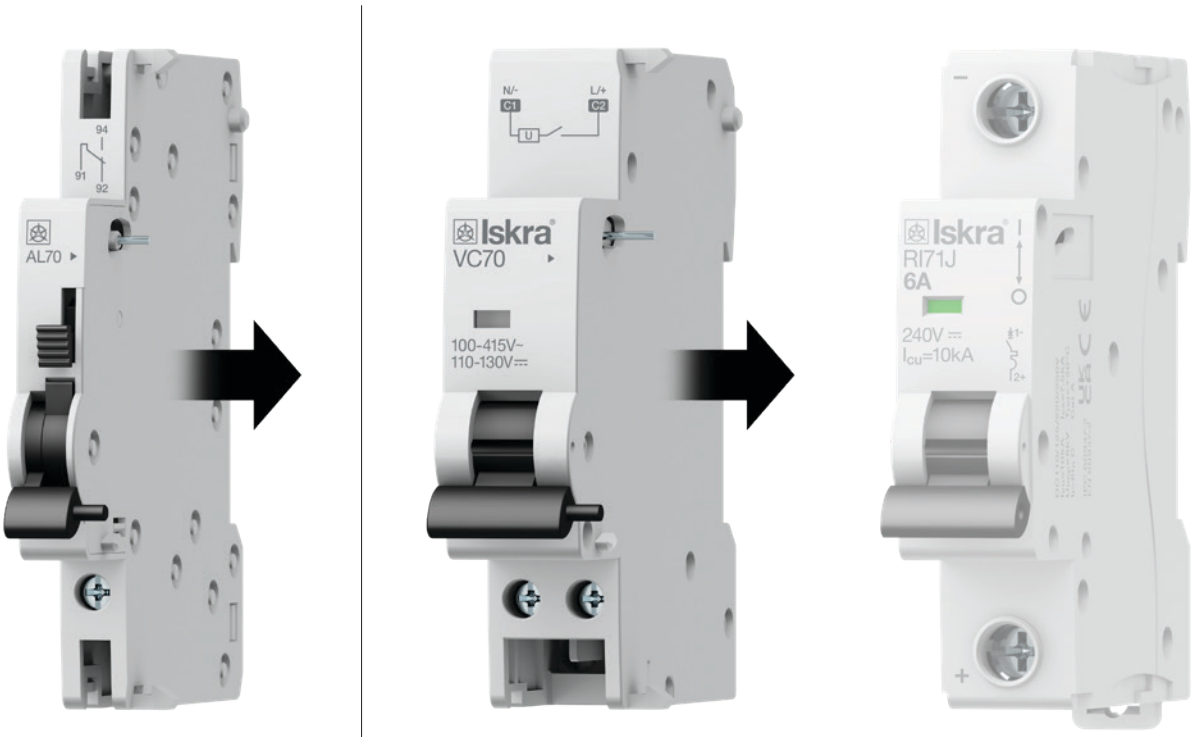

Types

PS70-11	auxiliary contact
AL70	alarm switch
VC70	shunt release
PC70	overvoltage and under-voltage release

PS70-11
Auxiliary Contact

Model	Symbol	Unit	Data
Rated current	I_n	A	3 A (400 VAC) 6 A (240 VAC) 1 A (110 VDC)
Terminal		mm²	0.5 - 4
Dielectric strength		V/1min	2000
Electro-mechanical endurance			≥ 5000 times
Ordering No.			786.091.488
Quantity / Box			10/100

AL70
Alarm Switch

Model	Symbol	Unit	Data
Contact capacity	I_n	A	3 A (400VAC) 6 A (230VAC) 9 A (125VDC)
Rated power voltage	U_s	V	400, 230, 125
Operating voltage range	U_s		70 - 100 %
Dielectric strength		V/1min	2000
Rated insulating voltage	U_i	V	500
Electro-mechanical endurance			≥ 4000 times
Ordering No.			786.091.489
Quantity / Box			10/100

Dimensions
(mm)

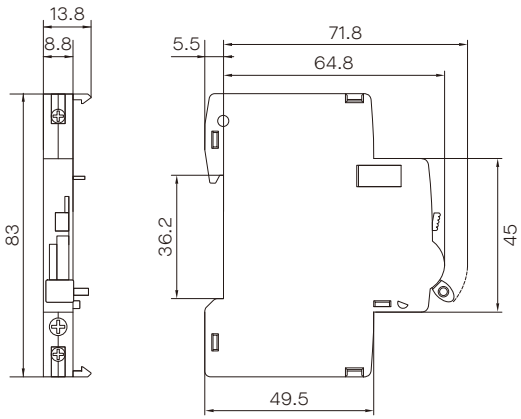

VC70
Shunt Release

Model	Symbol	Unit	Data
Nominal voltage	U_s	VAC	110 ~ 415
Max inrush current	I_n		3 A (415 VAC) 6 A (230 VAC) 9 A (110 VAC)
Dielectric strength		V/1min	2000
Release range		VAC	110 ~ 415
Electro-mechanical endurance			≥ 4000 times
Ordering No.			786.091.490
Quantity / Box			10/100

PC70
Overvoltage and undervoltage release

Model	Symbol	Unit	Data
Rated voltage	U_e	VAC	230
Max tripping voltage		V	280
Min tripping voltage		VAC	170
Electro-mechanical endurance			≥ 4000 times
Ordering No.			786.091.491
Quantity / Box			10/100

Dimensions
(mm)

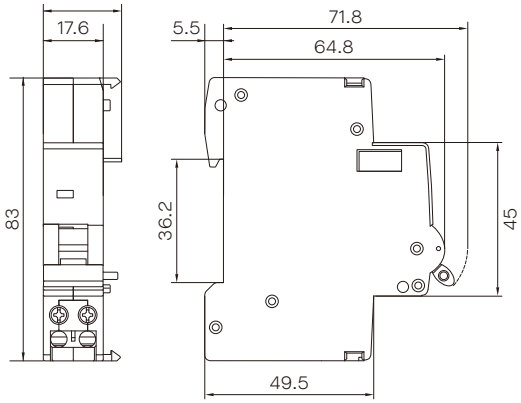

© Iskra d.o.o. July 2023 | Version 1.3