VOLTAGE TRANSDUCER iMT516

- TRUE RMS AC VOLTAGE MEASUREMENTS.
- VOLTAGE AUTO RANGE MEASUREMENTS UP TO 600 V⏚.
- WIDE FREQUENCY MEASUREMENT RANGE 16 HZ – 400 HZ.
- HIGH ACCURACY CLASS 0.2 (IEC-688), 0.1 ON COMMUNICATION.
- SERIAL OR ETHERNET AND USB COMMUNICATION.
- UP TO TWO I/O MODULES (ANALOGUE OUT, ALARM OUT, DIGITAL OUT, DIGITAL IN).
- POWERFUL ANALOGUE OUT; 6 VOLTAGE AND CURRENT RANGES, NON-LINEAR CHARACTERISTICS, ETC.
- USER FRIENDLY PC SETTING SOFTWARE.

Iskra®

FEATURES

- Measurements of TRMS voltage, frequency THD U and MD.
- High accuracy class 0.2 (IEC-688).
- Frequency range from 16 Hz to 400 Hz.
- 16 adjustable alarms.
- RS232/RS485 communication up to 115,200 bit/s or USB communication and Ethernet simultaneously.
- MODBUS communication protocol.
- Up to 2 inputs or outputs (analogue outputs, digital inputs, alarm outputs, digital outputs).
- Universal power supply (two voltage ranges).
- Automatic range of nominal voltage (max. 600 V_{L-N}).
- Housing for DIN rail mounting.
- User-friendly PC MiQen software.

DESCRIPTION

iMT516 is intended for measuring and monitoring single-phase electrical power network. Voltage input is electrically isolated from the system by means of high resistive input chain. It measures true RMS voltage value by means of fast sampling of voltage signals, which makes instruments suitable for acquisition of transient events. A built-in microcontroller calculates measurands (voltage, frequency, THD U, MD) from the measured signals. Measurands can be then converted into load independent DC current or voltage which is proportional to the true RMS measured value for the purpose of regulation of analogue and/or digital devices.

COMPLIANCE WITH STANDARDS

Standard EN	*Description*
61010-1: 2010	*Safety requirements for electrical equipment for measurement, control and laboratory use*
60688:2013	*Electrical measuring transducers for converting AC electrical variables into analogue and digital signals*
61326-1:2013	*EMC requirements for electrical equipment for measurement, control and laboratory use - Part 1: General requirements*
60529:1997/A1:2000	*Degrees of protection provided by enclosures (IP code)*
60068-2-1/ -2/ -6/ -27/-30	*Environmental testing (-1 Cold, -2 Dry heat, -30 Damp heat, -6 Vibration, -27 Shock)*
UL 94	*Tests for flammability of plastic materials for parts in devices and appliances*

APPLICATION

The iMT516 voltage transducer is used for a permanent monitoring of a single-phase voltage and frequency values. Wide range of various I/O modules makes iMT516 a perfect choice for numerous applications. iMT516 is delivered configured to default values. Subsequent customer configuration is possible with user friendly setting software MiQen.. iMT516 supports a wide range of communication interfaces. Standard serial RS232/485 with speed up to 115200 baud is perfect for simple applications and serial bus interfacing. Ethernet 10/100 is ideal for a long distance monitoring and configuration of numerous transducers. USB 2.0 can be used for a fast set-up or memory acquisition.

TECHNICAL DATA

Measurement input:

Nominal frequency range: 50 Hz, 60 Hz
Measuring frequency range: 16 Hz–400 Hz (max. 1000 Hz)

Voltage measurements:

Nominal value (UN) 57.7 V_{LN}...500 V_{LN}
Max. measured value (cont.) 600 V_{LN}
Max. allowed value (acc. to IEC/EN 60 688) 2 × U_N ; 10 s
Consumption < U^2 / 4.2 M Ω per phase
Input impedance 4.2 M Ω per phase

System:

Voltage inputs can be connected either directly to low-voltage network or via a high-voltage transformer to high-voltage network.

BASIC ACCURACY UNDER REFERENCE CONDITIONS

Total accuracy (measurements and analogue output) according to IEC/EN 60 688.

Accuracy is presented as percentage of range except when it is stated as an absolute value.

Measurand		Accuracy (±% of range)	
Voltage Rms		*0.2*	*0.1[1]*
Frequency (f)		*10 mHz*	
THD(U)	*(0...400 %)*	*0.5*	

[1] On communication

COMMUNICATION

iMT516 has a wide variety of communication possibilities to suit specific demands. It is equipped with two standard communication ports (COM1A and COM1B). This allows different users to access data from a device simultaneously and by using ethernet communication, data can be accessed worldwide.

Different configurations are possible (to be specified with order).

Configuration	*COM1A*	*COM1B*
1	*RS232/485[1]*	*/*
2	*Ethernet*	*USB*

[1] RS485 communication is available through DB9 or screw-in terminals, while RS232 is available only through DB9

Serial communication	***RS232[1]***	***RS485[1]***
Connection type	*Direct*	*Network*
Connection terminals	*DB9[1]*	*Screw terminals[1]*
Function	*Settings, measurements and records acquisition, firmware upgrade*	
Insulation	*Protection class I, 3.3 kV_{ACRMS} 1 min*	
Max. connection length	*3 m*	*1000 m*
Transfer mode	*Asynchronous*	
Protocol	*MODBUS RTU*	
Transfer rate	*2.4 kBaud to 115.2 kBaud*	
Number of bus stations	*/*	*≤32*

[1] Both types of comm. are available but only one at a time

Ethernet	
Connection type	*Network*
Connection terminals	*RJ-45*
Function	*Settings, measurements and records acquisition, firmware upgrade*
Insulation	*Protection class I, 3.3 kV_{ACRMS} 1 min*
Transfer mode	*Asynchronous*
Protocol	*MODBUS TCP*
Transfer rate	*10/100 Mb/s autodetect*

USB	
Connection type	*Direct*
Connection terminals	*USB-B*
Function	*Settings, measurements and records acquisition, firmware upgrade*
Insulation	*Protection class I, 3.3 kV_{ACRMS} 1 min*
Transfer mode	*Asynchronous*
Protocol	*MODBUS RTU*

Transfer rate	*USB 2.0*

INPUT/OUTPUT MODULES

iMT516 is equipped with four multipurpose input/output slots. The following modules are available:

Alarm (digital) output	*2 outputs*	*any I/O*
Analogue output	*2 outputs*	*any I/O*
Digital input	*2 inputs*	*any I/O*
Watchdog (status) output	*2 outputs*	*any I/O*

Analogue output:

Each of up to two analogue outputs is fully programmable and can be set to any of 6 hardware ranges, 4 current and 2 voltage, without opening an instrument. They all use the same output terminals.

Programmable DC current output:

Output range values –100 %…0…100 %

-1…0…1 mA	*Range 1*
-5…0…5 mA	*Range 2*
-10...0...10 mA	*Range 3*
-20...0...20 mA	*Range 4*
other ranges possible	*by MiQen software*
Burden voltage	*10 V*
External resistance	R_{Bmax} *=10 V/*I_{outN}

Programmable DC voltage output:

Output range values –100…0…100%

-1…0…1 V	*Range 5*
-10…0…10 V	*Range 6*
other ranges possible	*by software*
Burden current	*5 mA*
External resistance	R_{Bmin}*=* U_{outN} */ 5 mA*

General:

Linearization	*Linear, Quadratic*
No. of break points	*5*
Output value limits	*±120% of nominal output*
Response time	*< 100 ms*
(measurement and analogue output)	
Residual ripple	*< 0.5 % p.p.*

The outputs 1 and 2 may be either short or open-circuited. They are electrically insulated from each other (500 VACrms) and from all other circuits (3320 VACrms).

All output range values can be altered subsequently (zoom scale) using the setting software, but a supplementary error results (see INTRINSIC ERROR).

Alarm (digital) output:

Type	*Relay switch*
Rated voltage	*48 V AC/DC (+40% max)*
Max. switching current	*200 mA*
Contact resistance	*≤ 100 mΩ (100 mA, 24 V)*
Impulse	*Max. 4000 imp/hour Min. length 100 ms*
Insulation voltage	
Between coil and contact	*4000 VDC*
Between contacts	*1000 VDC*

Digital input

Rated voltage	*48 V AC/DC (+ 40% max)*
Max. current	*< 1.5 mA*
Min. signal width	*20 ms*
Min. pause width	*40 ms*
SET voltage	*40 %...120 % of rated voltage*
RESET voltage	*0 %...10 % of rated voltage*

Watchdog (status) output

Type	*Relay switch*
Normal operation	*Relay in ON position*
Failure detection delay	*≈1.5 s*
Rated voltage	*48 V AC/DC (+40 % max)*
Max. switching current	*1000 mA*
Contact resistance	*≤ 100 mΩ (100 mA, 24 V)*

UNIVERSAL POWER SUPPLY

Standard (high):

Nominal voltage AC	*80 V…276 V*
Nominal frequency	*40 Hz…65 Hz*
Nominal voltage DC	*70 V…300 V*
Consumption	*< 5 VA*
Power-on transient current	*< 20 A; 1 ms*

Optional (low):

Nominal voltage AC	*48 V…77 V*
Nominal frequency	*40 Hz…65 Hz*
Nominal voltage DC	*19 V…70 V*
Consumption	*< 5 VA*
Power-on transient current	*< 20 A; 1 ms*

SAFETY:

Protection:	*protection class I*
⚠ ⊕	*(protective earth terminal due to touchable metal parts (USB-B, RJ-45, DB9), current limiting fuse 1 A on aux. supply*
	Voltage inputs via high impedance Double insulation for I/O ports and COM1 port
Pollution degree	*2*
Installation category	*CAT III; 600 V⏚ meas. inputs*
	CAT III; 300 V⏚ aux. supply
	Acc. to EN 61010-1
Test voltages	*U_{AUX}↔I/O, COM1: 2210 VAC_{rms}*
	U_{AUX}↔U inputs: 3320 VAC_{rms}
	U inputs↔I/O, COM1: 3320 VAC_{rms}
	U inputs↔I inputs: 3320 VAC_{rms}
Enclosure material	*PC/ABS*
	Acc. to UL 94 V-0
Enclosure protection	*IP 40 (IP 20 for terminals)*

MECHANICAL

Dimensions	*(100 × 127 ×75) mm*
Mounting	*Rail mounting (35 × 15) mm acc. to DIN EN 50 022*
Enclosure material	*PC/ABS, PC (sliding cover)*
Flammability	*Acc. to UL 94 V-0*
Weight	*375 g*

AMBIENT CONDITIONS:

Ambient temperature	*usage group II*
	0…15…30…55 °C
	Acc. to IEC/EN 60 688
Operating temperature	*-30 °C to +70 °C (2x rated class)*
Storage temperature	*-40 °C to +70 °C*
Average annual humidity	*≤93% r.h.*

REFERENCE CONDITIONS:

Ambient temperature	*15°C…30°C*
Relative humidity	*≤93% r.h.*
Voltage input	*57.7 V…500 V*
Current input	*0.31 A…5 A*
Frequency	*45 Hz…65 Hz*
Active/Reactive power factor	*cosϕ = 1, sinϕ = 1*
Waveform	*Sinus*

INTRINSIC-ERROR (FOR ANALOGUE OUTPUTS):

For intrinsic-error for analogue outputs with bent or linear-zoom characteristic multiply accuracy class with correction factor (c). Correction factor c (the highest value applies):

Linear characteristic

$$c = \frac{1-\frac{y_0}{y_e}}{1-\frac{x_0}{x_e}} \; or \; c = 1$$

Bent characteristic

$$x_{b-1} \leq x \leq x_b$$

b – number of break point (1 to 5)

$$c = \frac{y_b - y_{b-1}}{x_b - x_{b-1}} \times \frac{x_e}{y_e} \; or \; c = 1$$

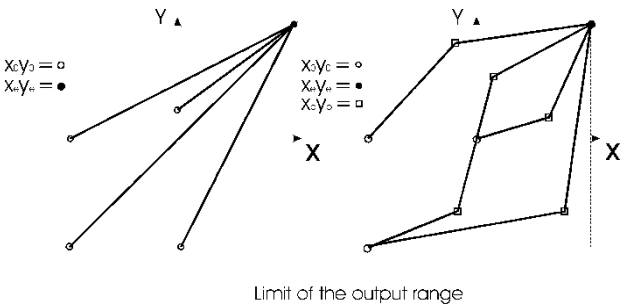

Examples of settings with linear and bent characteristic.

ALARMS

iMT516 supports monitoring of 16 alarms in two groups. Compare time delay and switch-off hysteresis are defined for each group of alarms.

MIQEN - SETTING AND ACQUISITION SOFTWARE

MiQen software is intended for supervision of iMT516 and many other instruments on a PC. Network and the transducer setting, display of measured and stored values and analysis of stored data in the transducer are possible via the serial, Ethernet or USB communication. The information and stored measurements can be exported in standard Windows formats. Multilingual software functions on Windows 98, 2000, NT, XP operating systems.

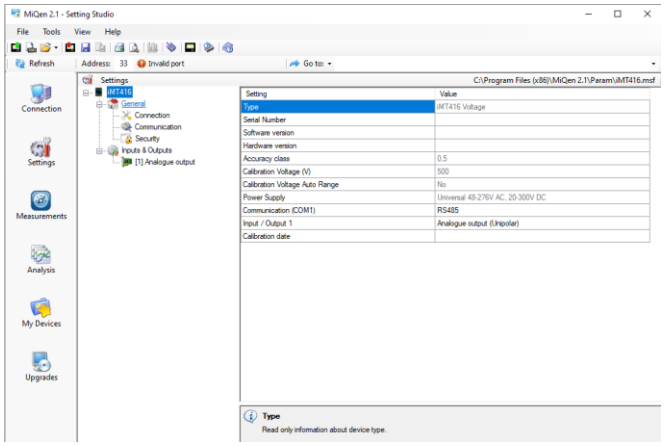

MiQen software is intended for:

- Setting all of the instruments parameters (online and offline).
- Viewing current measured readings.
- Complete I/O modules configuration.
- Upgrading instruments firmware.
- Searching the net for devices.
- Virtual interactive instrument.
- Comprehensive help support.

CONNECTION

System/ connection	Terminal assignment
Single-phase connection 1b (1W)	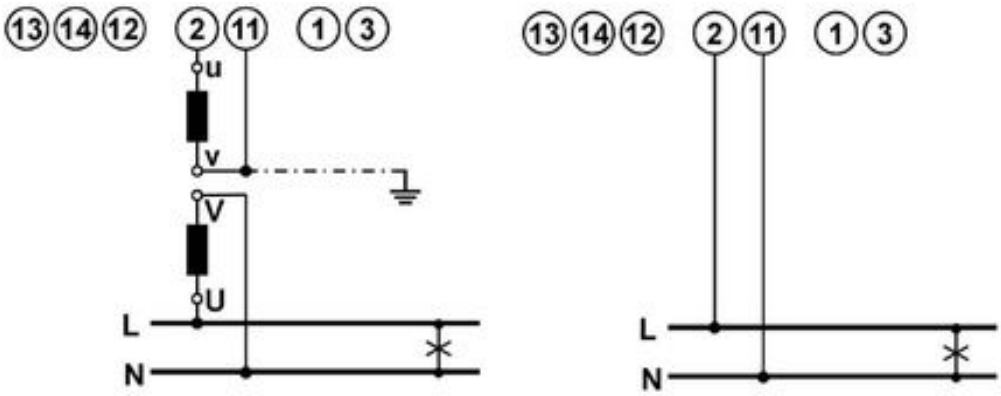

DIMENSIONAL DRAWING

Dimensions for iMT516 (standard EU clamp style terminals):

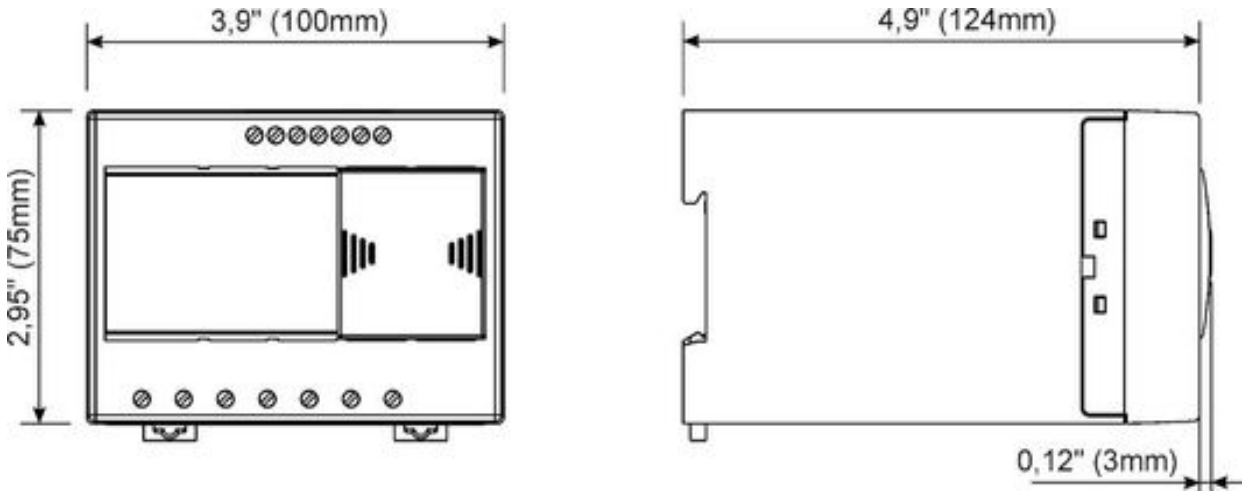

CONNECTION TABLE

Function			***Connection***
Measuring input:			*1/3*
	AC voltage	*UL1*	*2*
		N	*11*
		I/O	
Inputs / outputs:	*Module 1*	*+*	*15*
		—	*16*
	Module 2	*+*	*17*
		—	*18*
Auxiliary power supply:		*+ / AC (L)*	*13*
		– / AC (N)	*14*
		GROUND	*12*
Communication:	*RS485*	*Rx / A*	*23*#*
		NC	*24*#*
		Tx / B	*25*#*

*If ETHERNET/USB communication is supported, terminals 23, 24, and 25 are not used (unconnected)

RS232 communication is available only on DB9 connection terminal under transparent cover

DATA FOR ORDERING

iMT516:

The following data shall be stated:

Type of a transducer
Type of power supply
Type of communication
Type of I/O module(s)
Required energy accuracy

Supplement:

MiQen software

ORDERING

When ordering iMT516, all required specifications should be stated in compliance with the ordering code. Additional information could be stated regarding functionality of analogue outputs. Default settings for analogue outputs provided that no ordering information is given will be:

Analogue output	*Input quantity*	*Output quantity*
AO1	*U1 (0…500)V*	*0...20 mA*
AO2	*ƒ (45...65)Hz*	*0...20 mA*

If different analogue output settings are required, a proper input quantity/output quantity pair for each analogue output should be provided.

The transducers automatic range of input voltage (500 V_{L-N}) is not stated in the code.

Example of ordering:

iMT516 with EU style clamp terminals and with a universal-HI supply is connected to a universal high voltage and 5 A secondary current on 50 Hz network. Ethernet & USB communication, digital input as I/O1 and relay output as I/O2.

Voltage and current nominal value are due to auto-range fixed to max. nominal value and are therefore omitted from ordering code.

Example ordering code:

iMT516 S H E F M E
| | | | | EU style clamp terminals
| | | | Relay (alarm) output
| | | Digital input 48 V $_{AC/DC}$
| | Ethernet & USB
| 70 V_{DC}.. 300 V_{DC}, 80 V_{AC}... 276 V_{AC}
50 Hz, 60 Hz

GENERAL ORDERING CODE

All specifications are obligatory except function of analogue output(s), which should be stated in a form of description.

Device Type	Nominal freq.	Aux. power supply	Comm. COM1	I/O module 1	I/O module 2	Clamp terminals	
iMT516	**X**	**X**	**X**	**X**	**X**	**X**	
						E	EU style clamp terminals *
						R	Ring style terminal block
				A			Analogue output*
				S			Pulse output
				M			Relay (alarm) output
				W			Watchdog output
				F			Digital input 48 V AC/DC
				N			Without
			R	RS232 & 485	DB9 + Terminal *		
			E	Ethernet & USB			
		H	70...300 V DC, 80...276 V AC *				
		L	19...70 V DC, 48...77 V AC				
	S	50, 60 Hz *					
	A	400 Hz					
*	**-**	**standard**					

DISPOSAL

It is forbidden to deposit electrical and electronic equipment as municipal waste.

The manufacturer or provider shall take waste equipment free of charge.

DICTIONARY:

RMS	*Root Mean Square*
TRMS	*True Root Mean Square*
PO	*Pulse output*
TI	*Tariff input*
PA	*Power angle (between current and voltage)*
PF	*Power factor*
THD	*Total harmonic distortion*
Ethernet	*IEEE 802.3 data layer protocol*
MODBUS/DNP3	*Industrial protocol for data transmission*
MiQen	*ISKRA setting and acquisition Software*
AC	*Alternating quantity*
IR	*Infrared (optical) communication*

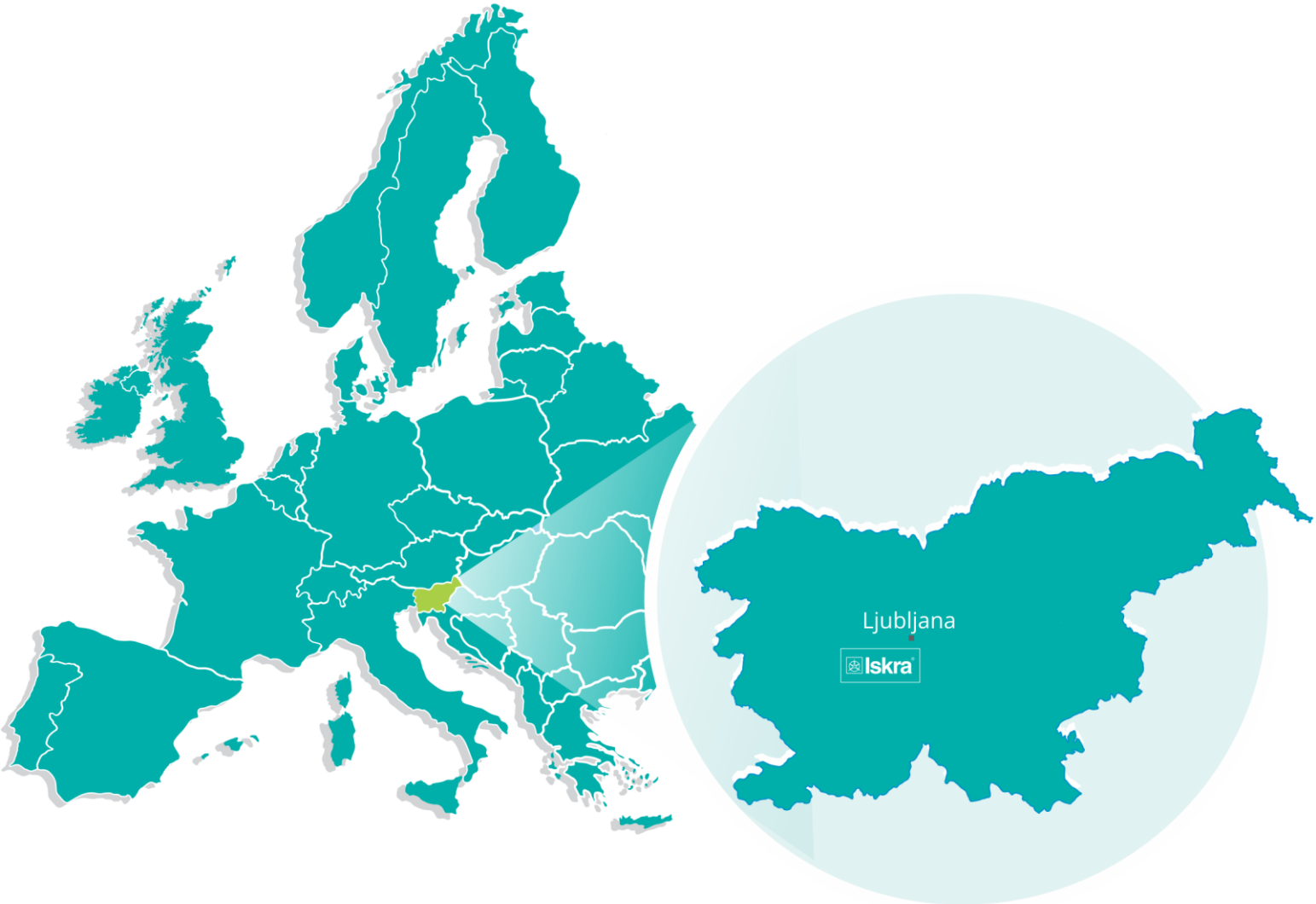

Iskra, d.o.o.
BU Ljubljana
Stegne 21
SI-1000 , Ljubljana
Phone: + 386 1 513 10 00

Iskra, d.o.o.
BU Capacitors
Vajdova ulica 71
SI-8333 , Semič
Phone: +386 7 38 49 200

Iskra, d.o.o.
BU MIS
Ljubljanska c. 24a
SI-4000 , Kranj
Phone: +386 4 237 21 12

Iskra, d.o.o.
BU Batteries & Potentiometers
Šentvid pri Stični 108
SI-1296 , Šentvid pri Stični
Phone: +386 1 780 08 00

Iskra, d.o.o.
BU Electroplating
Glinek 5
SI-1291 , Škofljica
Phone: +386 1 366 80 50

Iskra IP, d.o.o.
Vajdova ulica 71
SI-8333 , Semič
Phone: +386 7 384 94 54

Iskra STIK, d.o.o.
Ljubljanska cesta 24a
SI-4000 , Kranj
Phone: +386 4 237 22 33

Iskra Lotrič, d.o.o.
Ljubljanska c. 24a
SI-4000 , Kranj
Phone: +386 4 237 21 12

Iskra ODM, d.o.o.
Ljubljanska c. 24a
SI-4000 , Kranj
Phone: +386 4 237 21 12

Iskra Tela L, d.o.o.
Omladinska 66
78250 , Laktaši
Phone: +387 51 535 890

Iskra Sistemi - M dooel
Ul, Dame Gruev br. 16/5 kat
1000 , Skopje
Phone: +389 75 444 498

Iskra Commerce, d.o.o.
Hadži Nikole Živkoviča br. 2
11000 , Beograd
Phone: +381 11 328 10 41

Iskra Hong Kong Ltd.
33 Canton Road, T.S.T.
1705 , China HK City
Phone: +852 273 00 917

ISKRA ELECTRONICS GmbH
Südliche Münchner Str. 55
82031 Grünwald
Deutschland

Iskra®
Iskra, d.o.o.
Stegne 21
SI-1000 Ljubljana, Slovenia
Phone: +386 (0) 1 513 10 00
www.iskra.eu

EN

Published by Iskra, d.o.o. • Subject to change without notice • Version 1.00 July 2021 • EN P22.496.702